# CITY OF MEQUON CITY HALL HVAC AND CHAMBERS UPGRADE

11333 N CEDARBURG ROAD
MEQUON, WI 53092

CITY OF MEQUON PROJECT NO. : 3843
STRANG PROJECT NO. : 2024024

## SITE LOCATION MAP

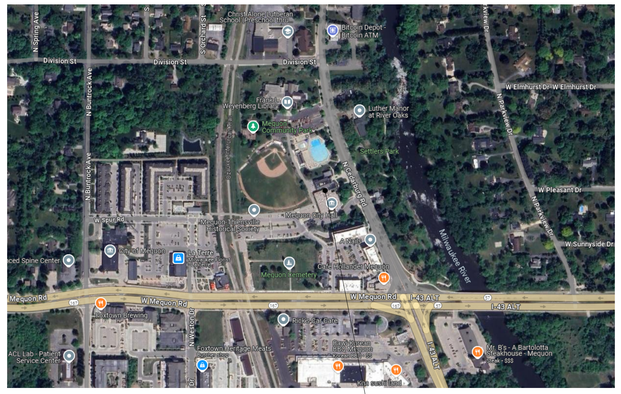



N

## STAMPS

### ARCHITECTURAL


### MECHANICAL


### ELECTRICAL


## DESIGN TEAM

**ARCHITECTURAL DESIGN, MECHANICAL, AND ELECTRICAL ENGINEERING**

STRANG, INC.

## PROJECT IMAGE

EXISTING COMMON COUNCIL CHAMBERS

## SHEET INDEX



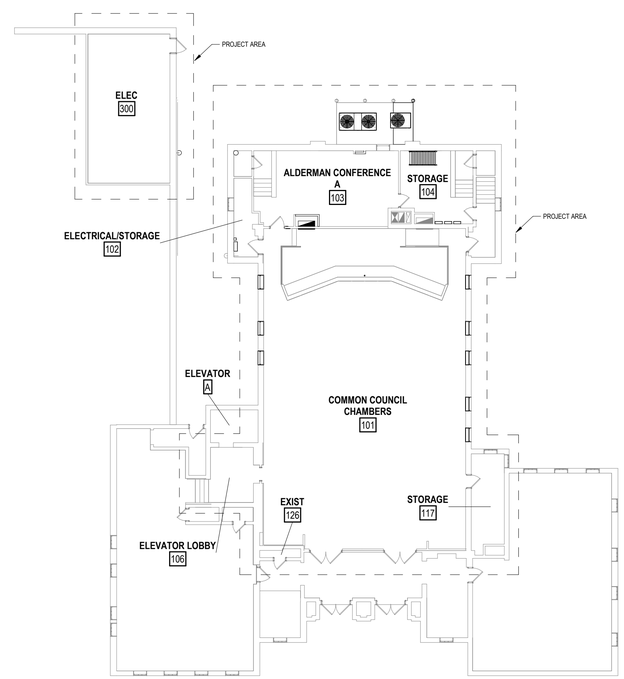


PN 1 T001 TN

### OVERALL FIRST FLOOR PLAN

SCALE: 1/16" = 1'-0"

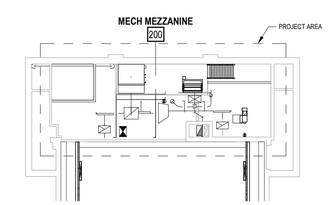


PN 2 T001 TN

### MECHANICAL MEZZANINE FLOOR PLAN

SCALE: 1/16" = 1'-0"

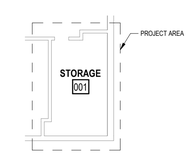


PN 3 T001 TN

### BASEMENT PLAN

SCALE: 1/16" = 1'-0"



REVISIONS

| NO. | DESCRIPTION | DATE |
|---|---|---|

CITY OF MEQUON CITY HALL HVAC AND CHAMBERS UPGRADE
11333 N CEDARBURG ROAD
MEQUON, WI 53092

DATE: 04/05/2024
DRAWING SET CD SET
STRANG PROJECT NO. 2024024

TITLE SHEET

T001

## ABBREVIATIONS

| | | |
|---|---|---|
| 0 | # | POUND, NUMBER |
| 0 | & | AND |
| 0 | < | ANGLE |
| 0 | @ | AT |
| 0 | A-100 | A LABEL - 100 MINUTE FIRE RATING |
| 0 | B-90 | B LABEL - 90 MINUTE FIRE RATING |
| 0 | C-45 | C LABEL - 45 MINUTE FIRE RATING |
| 0 | D-20 | D LABEL - 20 MINUTE FIRE RATING |
| 0 | Ø | DIAMETER, ROUND, PHASE |
| 00 | | |
| A | AB | ANCHOR BOLT |
| A | ABBR | ABBREVIATION |
| A | ACOUS | ACOUSTICAL |
| A | ACP | ACOUSTICAL CEILING PANEL |
| A | ACR | ACRYLIC, ACRYLIC MARKER BOARD |
| A | ADJ | ADJUSTABLE, ADJACENT |
| A | AFF | ABOVE FINISH FLOOR |
| A | AFS | AIR FLOW STATION |
| A | AGGR | AGGREGATE |
| A | AHU | AIR HANDLING UNIT |
| A | AL | ALUMINUM |
| A | ALT | ALTERNATE |
| A | AP | ACCESS PANEL |
| A | APPROX | APPROXIMATE |
| A | ARCH | ARCHITECTURAL, ARCHITECT |
| A | ASPH | ASPHALT |
| A | AV | AIR VALVE |
| AA | | |
| B | BAF | BAFFLES |
| B | BD | BOARD |
| B | BHD | BULKHEAD |
| B | BITUM | BITUMINOUS |
| B | BL | BORROWED LITE |
| B | BLDG | BUILDING |
| B | BLKG | BLOCKING |
| B | BM | BEAM |
| B | BN | BULLNOSE |
| B | BO | BOTTOM OF |
| B | BOT | BOTTOM |
| B | BP | BASE PLATE |
| B | BRG | BEARING |
| B | BSC | BIO-SAFETY CABINET |
| B | BTU | BRITISH THERMAL UNITS |
| B | BTUH | BRITISH THERMAL UNITS PER HOUR |
| B | BTW | BETWEEN |
| B | BUR | BUILT-UP ROOF |
| BB | | |
| C | C | CONVECTOR, CHANNEL |
| C | CAB | CABINET |
| C | CB | CATCH BASIN |
| C | CEM | CEMENT |
| C | CER | CERAMIC |
| C | CFCI | CONTRACTOR FURNISHED, CONTRACTOR INSTALLED |
| C | CFM | CUBIC FEET PER MINUTE |
| C | CG | CORNER GUARD |
| C | CH | COAT HOOK |
| C | CHBD | CHALKBOARD |
| C | CJ | CONTROL JOINT |
| C | CL | CENTER LINE |
| C | CLG | CEILING |
| C | CLOS | CLOSET |
| C | CLR | CLEAR |
| C | CMU | CONCRETE MASONRY UNIT |
| C | COL | COLUMN |
| C | CONC | CONCRETE |
| C | CONJ | CONSTRUCTION JOINT |
| C | CONN | CONNECTION |
| C | CONST | CONSTRUCTION |
| C | CONT | CONTROL |
| C | CONTR | CONTRACTOR |
| C | CORR | CORRIDOR |
| C | CPT | CARPET |
| C | CR | CARD READER |
| C | CS | CAST STONE |
| C | CT | CERAMIC TILE |
| C | CTR | CENTER |
| C | CTSK | COUNTERSINK |
| C | CU | CONDENSING UNIT |
| C | CUH | CABINET UNIT HEATER |
| C | CYL | CYLINDER |
| CC | | |
| D | D | DEPTH |
| D | DBA | DECK BEARING ANGLE |
| D | DBL | DOUBLE |
| D | DEMO | DEMOLITION, DEMOLISH |
| D | DEPT | DEPARTMENT |
| D | DF | DRINKING FOUNTAIN |
| D | DIA | DIAMETER |
| D | DIAG | DIAGONAL |
| D | DIM | DIMENSION |
| D | DISP | DISPENSER |
| D | DN | DOWN |
| D | DO | DO OVER, DITTO |
| D | DP | DAMPPROOFING |
| D | DR | DOOR |
| D | DS | DOWNSPOUT |
| D | DSD | DUCT SMOKE DETECTOR |
| D | DT | DRAIN TILE |
| D | DTL | DETAIL |
| D | DWG | DRAWING |
| D | DWL | DOWEL |
| DD | | |
| E | E | EAST |
| E | EA | EACH, EXHAUST AIR |
| E | EC | ELECTRICAL CONTRACTOR |
| E | EF | EXHAUST FAN |
| E | EHD | ELECTRIC HAND DRYER |
| E | EIFS | EXTERIOR INSULATION FINISH SYSTEM |
| E | EJ | EXPANSION JOINT |
| E | EL | ELEVATION |
| E | ELEC | ELECTRICAL |
| E | ELEV | ELEVATOR |

| | | |
|---|---|---|
| E | EMER | EMERGENCY |
| E | ENCL | ENCLOSURE |
| E | EP | ELECTRIC PANEL, EPOXY |
| E | EQ | EQUAL |
| E | EQUIP | EQUIPMENT |
| E | ETR | EXISTING TO REMAIN |
| E | EW | EACH WAY |
| E | EWC | ELECTRIC WATER COOLER |
| E | EWH | ELECTRIC WATER HEATER |
| E | EXH | EXHAUST |
| E | EXP | EXPANSION |
| E | EXPO | EXPOSED |
| E | EXST | EXISTING |
| E | EXT | EXTERIOR |
| EE | | |
| F | FA | FIRE ALARM |
| F | FB | FACE BRICK, FLOOR BOX |
| F | FCTY | FACTORY |
| F | FD | FLOOR DRAIN |
| F | FDN | FOUNDATION |
| F | FE | FIRE EXTINGUISHER |
| F | FEB | FIRE EXTINGUISHER BRACKET |
| F | FEC | FIRE EXTIINGUISHER CABINET |
| F | FF | FINISH FLOOR |
| F | FFLR | FITNESS FLOOR |
| F | FH | FUME HOOD, FIRE HOSE |
| F | FHC | FIRE HOSE CABINET |
| F | FIN | FINISH |
| F | FIX | FIXTURE |
| F | FL | FLOOR |
| F | FLUOR | FLUORESCENT |
| F | FO | FINISHED OPENING |
| F | FOC | FACE OF CONCRETE |
| F | FOS | FACE OF STUD |
| F | FPRF | FIREPROOFING |
| F | FRP | FIBERGLASS REINFORCED PLASTIC |
| F | FRT | FIRE RETARDANT |
| F | FRZ | FREEZER |
| F | FT | FOOT, FEET |
| F | FTG | FOOTING |
| F | FURR | FURRING |
| F | FUT | FUTURE |
| F | FV | FIELD VERIFY |
| FF | | |
| G | G | GAS |
| G | GA | GAUGE |
| G | GALV | GALANIZED |
| G | GB | GRAB BAR |
| G | GC | GENERAL CONTRACTOR |
| G | GL | GLASS |
| G | GMGS | GLASS MAT GYPSUM SHEATING |
| G | GND | GROUND |
| G | GWB | GYPSUM WALL BOARD |
| G | GYP | GYPSUM |
| GG | | |
| H | H | HIGH |
| H | HB | HOSE BIBB |
| H | HBD | HARDBOARD |
| H | HC | HOLLOW CORE |
| H | HDWD | HARDWOOD |
| H | HDWE | HARDWARE |
| H | HM | HOLLOW METAL |
| H | HORIZ | HORIZONTAL |
| H | HP | HORSEPOWER |
| H | HR | HOUR |
| H | HSS | HOLLOW STRUCTURAL STEEL |
| H | HT | HEIGHT |
| H | HVAC | HEATING, VENTILATION, & AIR CONDITIONING |
| H | HWD | HARDWOOD |
| HH | | |
| I | ID | INSIDE DIAMETER |
| I | IE | INVERT ELEVATION |
| I | IF | INSIDE FACE |
| I | IMP | INSULATED METAL PANEL |
| I | INSUL | INSULATION |
| I | INT | INTERIOR |
| I | ITD | IMPACT TRAFFIC DOOR |
| II | | |
| J | JAN | JANITOR |
| J | JBE | JOIST BEARING ELEVATION |
| J | JT | JOINT |
| JJ | | |
| K | KIT | KITCHEN |
| K | KO | KNOCKOUT |
| K | KP | KICK PLATE |
| K | KS | KNEE SPACE |
| KK | | |
| L | L | LENGTH, ANGLE |
| L | LAB | LABORATORY |
| L | LAM | LAMINATE |
| L | LAV | LAVATORY |
| L | LLH | LONG LEG HORIZONTAL |
| L | LLV | LONG LEG VERTICAL |
| L | LT | LIGHT |
| L | LWC | LIGHT WEIGHT CONCRETE |
| LL | | |
| M | MATL | MATERIAL |
| M | MAX | MAXIMUM |
| M | MB | MOP BASIN |
| M | MC | MECHANICAL CONTRACTOR |
| M | MECH | MECHANICAL |
| M | MEMB | MEMBRANE |
| M | MEP | MECHANICAL, ELECTRICAL, PLUMBING |
| M | MEZZ | MEZZANINE |
| M | MFR | MANUFACTURER |
| M | MH | MANHOLE, MOP HOLDER |
| M | MIN | MINIMUM |
| M | MIR | MIRROR |
| M | MISC | MISCELLANEOUS |
| M | ML&P | METAL LATH & PLASTER |
| M | MO | MASONRY OPENING |
| M | MTD | MOUNTED |
| TT | | |

| | | |
|---|---|---|
| M | MTL | METAL |
| M | MUL | MULLION |
| MM | | |
| N | N | NORTH |
| N | NIC | NOT IN CONTRACT |
| N | NO | NUMBER |
| N | NOM | NOMINAL |
| N | NP | NON POTABLE WATER |
| N | NTS | NOT TO SCALE |
| NN | | |
| O | OA | OVERALL, OUTSIDE AIR |
| O | OC | ON CENTER |
| O | OD | OUTSIDE DIAMETER |
| O | OFCI | OWNER FURNISHED CONTRACTOR INSTALLED |
| O | OFF | OFFICE |
| O | OFOI | OWNER FURNISHED OWNER INSTALLED |
| O | OH | OVERHEAD |
| O | OHCD | OVERHEAD COILING DOOR |
| O | OHSD | OVERHEAD SECTIONAL DOOR |
| O | OP | OPERABLE PARTITION |
| O | OPG | OPENING |
| O | OPNG | OPENING |
| O | OPP | OPPOSITE |
| O | OPP-H | OPPOSITE HAND |
| OO | | |
| P | PA | PUBLIC ADDRESS |
| P | PC | PLUMBING CONTRACTOR |
| P | PDO | POWER DOOR OPERATOR |
| P | PERP | PERPENDICULAR |
| P | PL | PLATE, PROPERTY LINE |
| P | PLAM | PLASTIC LAMINATE |
| P | PLAS | PLASTER |
| P | PLBG | PLUMBING |
| P | PLYWD | PLYWOOD |
| P | PR | PAIR |
| P | PT | PAINT |
| P | PTD | PAPER TOWEL DISPENSER |
| P | PTD/R | PAPER TOWEL DISPENSER / RECEPTACLE |
| P | PTN | PARTITION |
| P | PTR | PAPER TOWEL RECEPTACLE |
| P | PVT | PAVER TILE |
| PP | | |
| Q | QT | QUARRY TILE |
| QQ | | |
| R | R | RADIUS, RISER |
| R | RA | RETURN AIR |
| R | RB | RESILIENT BASE |
| R | RBC | RESILIENT BASE COVED |
| R | RBS | RESILIENT BASE STRAIGHT |
| R | RD | ROOF DRAIN |
| R | REF | REFERENCE, REFRIGERATOR |
| R | REFR | REFRIGERATOR |
| R | REINF | REINFORCED |
| R | REM | REMOVE |
| R | REQ | REQUIRED |
| R | REQD | REQUIRED |
| R | RF | RESINOUS FLOORING |
| R | RM | ROOM, RATED METAL |
| R | RO | ROUGH OPENING |
| R | RT | RUBBER TILE |
| R | RUB | RUBBER |
| R | RWD | REDWOOD |
| RR | | |
| S | S | SOUTH, SINK, SUPPLY |
| S | S&V | STAIN & VARNISH |
| S | SAB | SOUND ATTENUATION BLANKET |
| S | SAN | SANITARY |
| S | SB | SOIL BORING |
| S | SC | SOLID CORE |
| S | SCD | SEAT COVER DISPENSER |
| S | SCHED | SCHEDULE |
| S | SCON | SEALED CONCRETE |
| S | SD | SOAP DISPENSER |
| S | SECT | SECTION |
| S | SF | SQUARE FOOT |
| S | SH | SHELF |
| S | SHR | SHOWER |
| S | SHT | SHEET |
| S | SIM | SIMILAR |
| S | SND | SANITARY NAPKIN DISPENSER |
| S | SNR | SANITARY NAPKIN RECEPTACLE |
| S | SOG | SLAB ON GRADE |
| S | SPEC | SPECIFICATION |
| S | SQ | SQUARE |
| S | SS | STAINLESS STEEL |
| S | SSM | SOLID SURFACE MATERIAL |
| S | ST | STONE |
| S | STA | STATION |
| S | STD | STANDARD |
| S | STL | STEEL |
| S | STOR | STORAGE |
| S | STRUC | STRUCTURAL |
| S | SUSP | SUSPENDED |
| S | SYM | SYMMETRICAL |
| SS | | |
| T | T | TREAD, THRESHOLD |
| T | T&B | TOP & BOTTOM |
| T | T&G | TONGUE & GROOVE |
| T | TEL | TELEPHONE |
| T | TEMP | TEMPORARY, TEMPERATURE |
| T | TER | TERRAZZO |
| T | THK | THICK |
| T | TKBD | TACK BOARD |
| T | TOB | TOP OF BEAM |
| T | TOF | TOP OF FOOTING |
| T | TOS | TOP OF STEEL |
| T | TPD | TOILET PAPER DISPENSER |
| T | TRANS | TRANSPARENT |
| T | TV | TELEVISION |
| T | TW | TOP OF WALL |
| T | TYP | TYPICAL |

| | | |
|---|---|---|
| U | UH | UNIT HEATER |
| U | UNF | UNFINISHED |
| U | UNO | UNLESS NOTED OTHERWISE |
| U | UR | URINAL |
| UU | | |
| V | V | VENT, VOLT, VALVE |
| V | VAC | VACUUM |
| V | VCT | VINYL COMPOSITION TILE |
| V | VERT | VERTICAL |
| V | VEST | VESTIBULE |
| V | VIF | VERIFY IN FIELD |
| V | VSF | VINYL SHEET FLOORING |
| V | VTR | VENT THROUGH ROOF |
| V | VWC | VINYL WALL COVERING |
| VV | | |
| W | W | WEST, WIDTH, WIDE, WATT, WASTE, WATER |
| W | W/ | WITH |
| W | W/O | WITHOUT |
| W | WB | WOOD BASE |
| W | WC | WATER CLOSET |
| W | WD | WOOD |
| W | WF | WIDE FLANGE |
| W | WM | WIRE MESH |
| W | WP | WATERPROOF, WEATHERPROOF |
| W | WR | WATER RESISTANT, WATER RECEPTACLE |
| W | WT | WEIGHT |
| W | WWF | WELDED WIRE FABRIC |
| WW | | |
| Y | YD | YARD |

## SYMBOL LEGEND

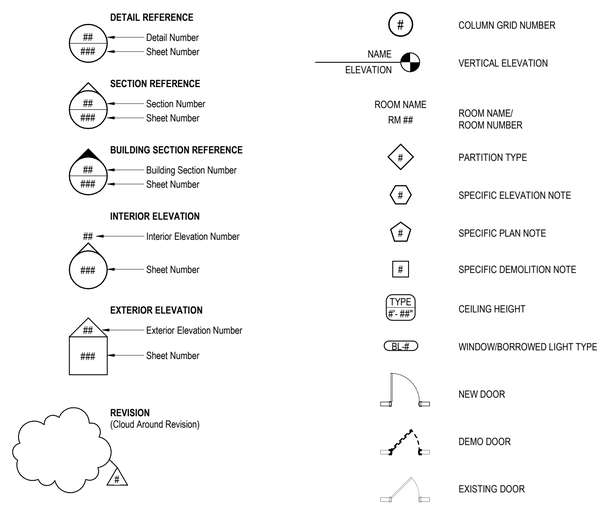


## MATERIAL LEGEND

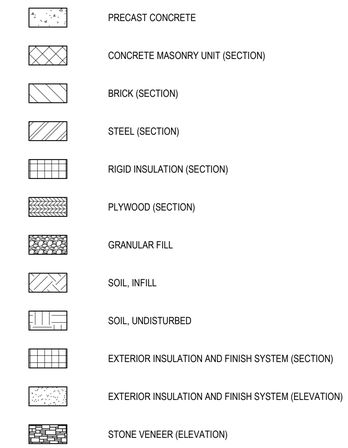



STRANG
ARCHITECTURE
ENGINEERING
INTERIOR DESIGN
MADISON, WI | WAUKESHA, WI




REVISIONS

| NO. | DESCRIPTION | DATE |
|---|---|---|

CITY OF MEQUON CITY HALL HVAC AND CHAMBERS UPGRADE
11333 N CEDARBURG ROAD
MEQUON, WI 53092

DATE: 04/05/2024
DRAWING SET CD SET
STRANG PROJECT NO. 2024024

GENERAL INFORMATION

G001

4/4/2024 6:20:17 PM

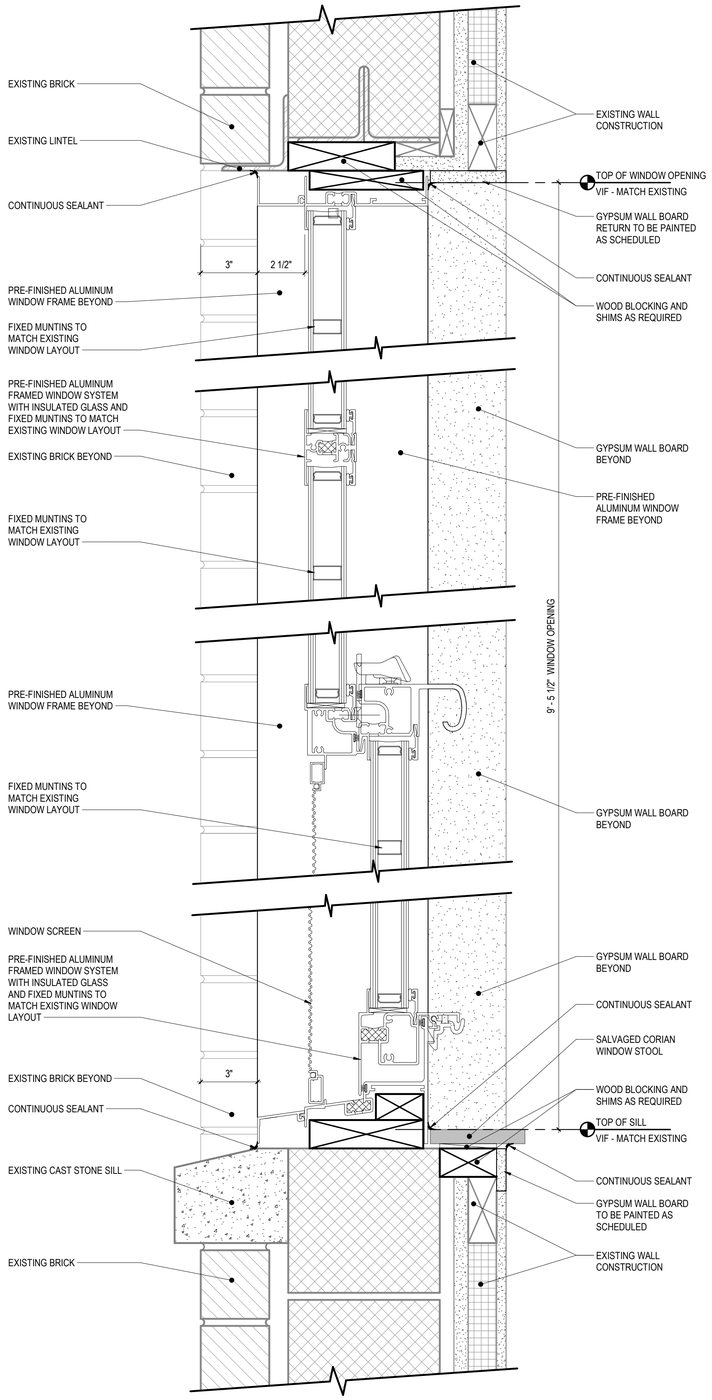


1 A001 **NEW ALUMINUM WINDOW - HEAD AND SILL DETAIL**

SCALE: 3" = 1'-0"

## INTERIOR FINISHES SCHEDULE

| ABBR | DESCRIPTION | MANUFACTURER | PRODUCT | COLOR | NUMBER | SIZE | REMARKS |
|---|---|---|---|---|---|---|---|
| 06 20 00 FINISH CARPENTRY | | | | | | | |
| WB-1 | WOOD BASE | - | MATCH EXISTING | MATCH EXISTING | - | MATCH EXISTING | - |
| 09 51 00 ACOUSTICAL CEILINGS | | | | | | | |
| ACP-1 | ACOUSTICAL CEILING PANEL | ARMSTRONG | SAHARA | WHITE | 271 | 24" X 24" X 15/16" GRID | - |
| ACP-2 | ACOUSTICAL CEILING PANEL | USG | MARS HIGH NRC, SLT | WHITE | 89138 | 24" X 48" X 15/16" GRID | 4 |
| 09 54 00 SPECIALTY CEILINGS | | | | | | | |
| SC-1 | SPECIALTY CEILING | USG | ENSEMBLE | WHITE | - | - | 2, 6, 7 |
| SC-2 | SPECIALTY CEILING | USG | RADIANS | SARANTE CHERRY ANIGRE | S34 | SEE PLANS | 3, 5, 6 |
| SC-3 | SPECIALTY CEILING | KOROSEAL | ARBOR WOOD WALLCOVERING | CHERRY, AMERICAN QUARTER CUT | AA2531 | 3'-0" X 9'-0" | 4, 8 |
| 09 68 13 CARPET TILE | | | | | | | |
| CPTL-1 | CARPET TILE | INTERFACE | MOUNTAIN ROCK | ONYX PEAK | 107328 | 50CM X 50CM | 9 |
| CPTL-2 | CARPET TILE | INTERFACE | MONOCHROME | CONCRETE | 101839 | 50CM X 50CM | 1, 9 |
| CPTL-3 | CARPET TILE | INTERFACE | MONOCHROME | GRANITE | 101837 | 50CM X 50CM | 1, 9 |
| CPTL-4 | CARPET TILE | INTERFACE | MONOCHROME | SEAL | 101833 | 50CM X 50CM | 1, 9 |
| 09 91 23 INTERIOR PAINTING | | | | | | | |
| PT-1 | PAINT | MATCH EXISTING | MATCH EXISTING | WHITE, MATCH EXISTING | - | - | 10 |
| PT-2 | PAINT | SHERWIN WILLIAMS | - | IRON ORE | SW 7069 | - | 3, 11 |

## ROOM FINISH SCHEDULE

| NO. | NAME | FINISHES | | | REMARKS |
|---|---|---|---|---|---|
| | | FLOOR | BASE | WALL | |
| 001 | STORAGE | ETR | ETR | ETR | - |
| 101 | COMMON COUNCIL CHAMBERS | CPTL-1, 2, 3, 4 | WB-1 | ETR | - |
| 102 | ELECTRICAL/STORAGE | ETR | ETR | ETR | - |
| 103 | ALDERMAN CONFERENCE A | CPTL-1 | WB-1 | ETR | 1 |
| 104 | STORAGE | ETR | ETR | ETR | - |
| 106 | ELEVATOR LOBBY | CPTL-1 | WB-1 | ETR | - |
| 117 | STORAGE | ETR | ETR | ETR | - |
| 126 | EXIST | ETR | ETR | ETR | - |
| 200 | MECH MEZZANINE | - | - | - | - |
| 300 | ELEC | ETR | ETR | ETR | - |
| A | ELEVATOR | ETR | ETR | ETR | - |

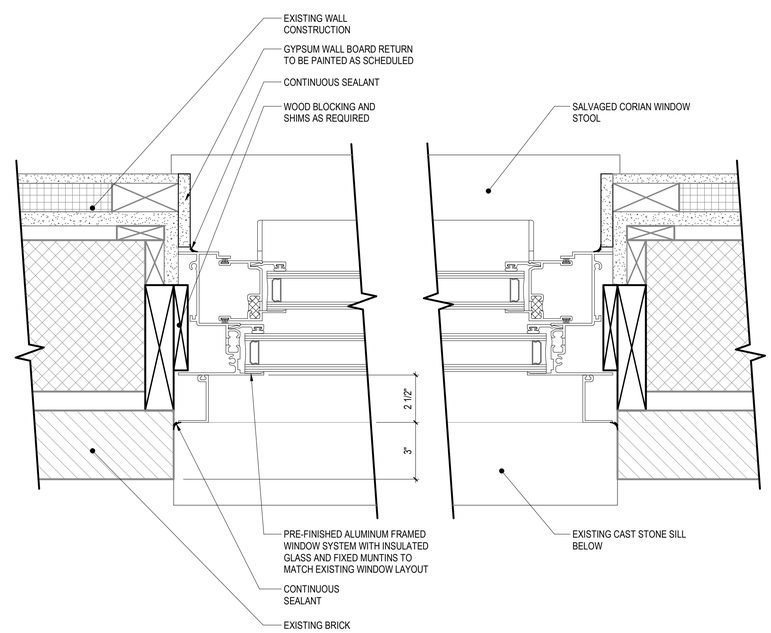


2 A001 **NEW ALUMINUM WINDOW - JAMB DETAIL**

SCALE: 3" = 1'-0"

## ROOM FINISH SCHEDULE GENERAL NOTES

1 REFER TO REFLECTED CEILING PLANS FOR CEILING HEIGHTS.
2 REFER TO INTERIOR ELEVATIONS AND INTERIOR FINISH PLANS WHERE MATERIAL VARIES.
3 ELECTRICAL PANELS, GRILLES, WALL/CEILING DIFFUSERS, WALL-MOUNTED BOXES, ACCESS PANELS, ETC. TO BE PAINTED THE SAME COLOR AS THE ADJACENT WALL/GWB SURFACE ON WHICH THEY OCCUR, UNO.
4

## INTERIOR FINISHES SCHEDULE REMARKS

1 CUSTOM LASERCUT LOGO, SEE 4/A901
2 BASE BID
3 ALTERNATE 1
4 ALTERNATE 2
5 PERFORATION PATTERN CEO9420 (SD-10). ACOUSTIBOND BLACK BACKER
6 CONTACT: SCOTT UGLOW, USG, 612-946-1930, SUGLOW@USG.COM
7 INSTALLATION TO BE DONE BY MANUFACTURER-CERTIFIED CONTRACTOR
8 BOOK MATCH VENEER
9 MONOLITHIC INSTALL
10 OWNER SCOPE
11 GC SCOPE

## ROOM FINISH SCHEDULE LEGEND

| | |
|---|---|
| ACP | ACOUSTICAL CEILING PANEL |
| CPT | BROADLOOM CARPET |
| CPTL | CARPET TILE |
| ES | EXPOSED STRUCTURE |
| ETR | EXISTING TO REMAIN |
| GWB | GYPSUM WALL BOARD |
| PT | PAINT |
| RB | RESILIENT BASE |
| SC | SPECIALTY CEILING |
| SSM | SOLID SURFACE MATERIAL |
| WB | WOOD BASE |
| WD | WOOD |

## ROOM FINISH SCHEDULE REMARKS

1 ALTERNATE 3

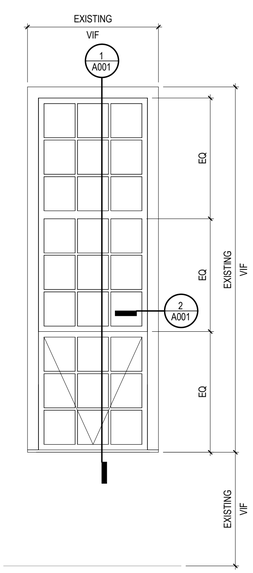


3 A001 **TYPICAL EXTERIOR WINDOW ELEVATION**

SCALE: 1/2" = 1'-0"

STRANG

ARCHITECTURE
ENGINEERING
INTERIOR DESIGN

MADISON, WI | WAUKESHA, WI



REVISIONS

| NO. | DESCRIPTION | DATE |
|---|---|---|

CITY OF MEQUON CITY HALL HVAC AND CHAMBERS UPGRADE
11333 N CEDARBURG ROAD
MEQUON, WI 53092

DATE: 04/05/2024
DRAWING SET CD SET
STRANG PROJECT NO. 2024024

INTERIOR FINISH SCHEDULES AND WINDOW DETAILS

A001

4/4/2024 6:20:18 PM

## GENERAL DEMOLITION PLAN NOTES

1. MAINTAIN CONTINUOUS UTILITY SERVICE TO ALL SPACES IN THE BUILDING. COORDINATE DISRUPTIONS IN SERVICE WITH OWNER.
2. PROTECT IN PLACE DURING ENTIRE CONSTRUCTION PROCESS: ALL FLOORING, SURFACES AND ITEMS TO REMAIN.
3. COORDINATE THE AVAILABILITY OF AREAS REQUIRING DEMOLITION WITH OWNER. SEQUENCE WORK ACCORDINGLY AND COORDINATE W/ ALL TRADES.
4. EXISTING CONSTRUCTION TO REMAIN IS SHOWN SCREENED. CONSTRUCTION AND EQUIPMENT TO BE REMOVED IS SHOWN WITH DASHED LINES.
5. PATCH, PREPARE, REPAIR AND / OR RESTORE SURFACES SCHEDULED TO REMAIN INTACT THAT ARE DAMAGED AS A RESULT OF DEMOLITION WORK.
6. VISIT THE SITE PRIOR TO SUBMITTING A BID TO BECOME FAMILIAR WITH EXISTING CONDITIONS.
7. DEMOLITION PLANS ARE NOT NECESSARILY INCLUSIVE OF ALL ITEMS NEEDING REMOVAL. COORDINATE WITH ALL OTHER DRAWINGS AND FIELD VERIFY EXISTING CONDITIONS.
8. COORDINATE DEMOLITION DIMENSIONS ON THIS PLAN WITH OTHER DRAWINGS AND EXISTING CONDITIONS.
9. REFER TO HVAC, ELECTRICAL, PLUMBING, AND FIRE PROTECTION DRAWINGS FOR ADDITIONAL DEMOLITION AND MODIFICATIONS REQUIRED FOR HVAC, ELECTRICAL, PLUMBING, AND FIRE PROTECTION SYSTEMS.

## # SPECIFIC DEMOLITION PLAN NOTES

1. REMOVE EXISTING ALUMINUM WINDOW. IF ORIGINAL WOOD WINDOW FRAME BENEATH REMOVED ALUMINUM FRAME, ORIGINAL FRAME TO REMAIN IN PLACE AND MODIFY ALUMINUM PANNING AND TRIM AS REQUIRED. DIGITALLY PHOTOGRAPHONE EXAMPLE OF EXISTING WOOD FRAME AND PROVIDE DIMENSIONED CROSS SECTION DRAWINGS OF SILL, JAMB, AND HEAD. PROVIDE OWNER AND ARCHITECT COPIES OF DIGITAL PHOTOS AND PDFS OF JAMB SKETCHES. SALVAGE SILL FOR RE-INSTALLATION.
2. REMOVE WOOD BASE THROUGHOUT.
3. REMOVE CARPETING AND PREP FLOOR FOR NEW CARPET THROUGHOUT 101 COMMON COUNCIL CHAMBERS.
4. REMOVE CARPETING AND STAIR NOSING. PREP FLOOR FOR NEW CARPET.
5. REMOVE LADDER. PATCH WALL AS NEEDED.
6. REMOVE PAVEMENT. COORDINATE EXACT AREA WITH MECHANICAL DRAWINGS
7. REFER TO MECHANICAL AND ELECTRICAL DRAWINGS FOR SPECIFIC DEMOLITION INFORMATION.
8. STAIR, FLOORING AND WALL BASE SCOPE TO BE PRICED AS ALTERNATE 3.
9. PROJECTOR SCREEN TO BE REMOVED BY OWNER.
10. REMOVE EXISTING 40"X48" LOUVER AND PORTION OF WALL TO ALLOW NEW MECHANICAL EQUIPMENT TO GET INTO 103 ALDERMAN CONFERENCE A AND ACCESS MECHANICAL MEZZANINE . MINIMUM CLEARANCE NEEDED IS 70" WIDE X 60" HIGH, VERIFY IN FIELD. SEE MECHANICAL AND ELECTRICAL DRAWINGS FOR ADDITIONAL INFORMATION.
11. REMOVE WALLS TO ALLOW NEW MECHANICAL EQUIPMENT TO GET INTO 103 ALDERMAN CONFERENCE A AND ACCESS MECHANICAL MEZZANINE. SALVAGE WALL BASE FOR RE-INSTALLATION. SEE MECHANICAL AND ELECTRICAL DRAWINGS FOR ADDITIONAL INFORMATION.
12. REMOVE WALL TO ACCESS MECHANICAL EQUIPMENT. SALVAGE BASE FOR RE-INSTALLATION. REFER TO MECHANICAL DRAWINGS FOR ADDITIONAL INFORMATION.

## FLOOR PLAN LEGEND

ROOM NAME — ROOM NAME
101 — ROOM NUMBER
XXX-X | XX-X — WALL BASE / FLOORING TYPE
XX-# XX-# — FLOOR TRANSITION CALLOUT

## GENERAL FLOOR PLAN NOTES

1. ALL DRAWINGS ARE OF EQUAL IMPORTANCE IN DEFINING THE WORK OF THE CONTRACT DOCUMENTS. CAREFULLY STUDY AND COMPARE ALL DRAWINGS DURING THE BIDDING PERIOD AND BEFORE INSTALLATION OF WORK. PROMPTLY REPORT INCONSISTENCIES IN THE DRAWINGS TO THE ARCHITECT FOR CLARIFICATION.
2. DO NOT SCALE DRAWINGS. THE DRAWINGS ARE NOT NECESSARILY TO SCALE - USE GIVEN DIMENSIONS. VERIFY ALL CONDITIONS AND DIMENSIONS AT THE PROJECT SITE PRIOR TO THE START OF CONSTRUCTION. ANY INCONSISTENCIES DISCOVERED BY THE CONTRACTOR SHALL BE REPORTED PROMPTLY TO THE ARCHITECT FOR CLARIFICATION BEFORE COMMENCING THE WORK. DIMENSIONS ARE GIVEN FROM FACE TO FACE OF WALLS. SEE WALL SECTIONS AND PARTITION TYPES FOR DETAILS.
3. WHERE SPECIFIC DIMENSIONS, DETAILS OR DESIGN INTENT CANNOT BE DETERMINED FROM DOCUMENTS CONSULT THE ARCHITECT BEFORE PROCEEDING WITH WORK.
4. PATCH, PREPARE AND / OR RESTORE WORK SCHEDULED TO REMAIN THAT IS DAMAGED AS A RESULT OF DEMOLITION WORK. RESTORATION AND PATCHING WORK SHALL BE DONE IN A MANNER THAT MAINTAINS FIRE RATING OF RATED BUILDING COMPONENTS.
5. PROTECT WORK IN PLACE DURING CONSTRUCTION
6. COORDINATE THE AVAILABILITY OF AREAS REQUIRING WORK WITH THE OWNER.
7. REFER TO MECHANICAL, ELECTRICAL, PLUMBING, AND FIRE PROTECTION DRAWINGS FOR ADDITIONAL WORK AND MODIFICATIONS REQUIRED FOR HVAC, ELECTRICAL, PLUMBING AND FIRE PROTECTION SYSTEMS.
8. REFER ALSO TO INTERIOR ELEVATIONS FOR ADDITIONAL INFORMATION.
9. FOR FLOORING TRANSITIONS OCCURRING AT A DOORWAY, CENTER TRANSITION ON DOOR UNLESS NOTED OTHERWISE.

## # SPECIFIC FLOOR PLAN NOTES

1. PATCH DRYWALL/PLASTER AROUND WINDOW AND SILL AS NECESSARY. OWNER RESPONSIBLE FOR NEW PAINT.
2. RE-INSTALL SILLS.
3. PROVIDE 6" THICK CONCRETE PAD. COORDINATE EXACT LOCATION AND SIZE REQUIREMENTS WITH MECHANICAL DRAWINGS.
4. BOLLARD. MATCH EXISTING ADJACENT TYPE, SIZE AND FINISH.
5. STAIR, FLOORING AND WALL BASE SCOPE TO BE PRICED AS ALTERNATE 3.
6. CLIENT RESPONSIBLE FOR PAINTING GWB AFTER PATCHING BY GC.
7. MONITOR TO BE INSTALLED BY OWNER. PROVIDE ADDITIONAL BLOCKING BEHIND MOUNTING FRAME AS REQUIRED.
8. INSTALL GROMMET IN EXISTING CASEWORK. COORDINATE FINAL LOCATION WITH OWNER.
9. INFILL WALL AND PATCH AS NEEDED. RE-INSTALL LOUVER. OWNER RESPONSIBLE FOR PAINT.
10. REPLACE WALLS IN SAME LOCATION AS EXISTING, PATCH AS NEEDED. RE-INSTALL BASE. OWNER RESPONSIBLE FOR PAINT.
11. SHIP LADDER, SEE SPECIFICATIONS.
12. REPLACE WALLS AS NECESSARY TO ENCLOSE NEW EQUIPMENT, PATCH AS NEEDED. RE-INSTALL BASE. OWNER RESPONSIBLE FOR PAINT.

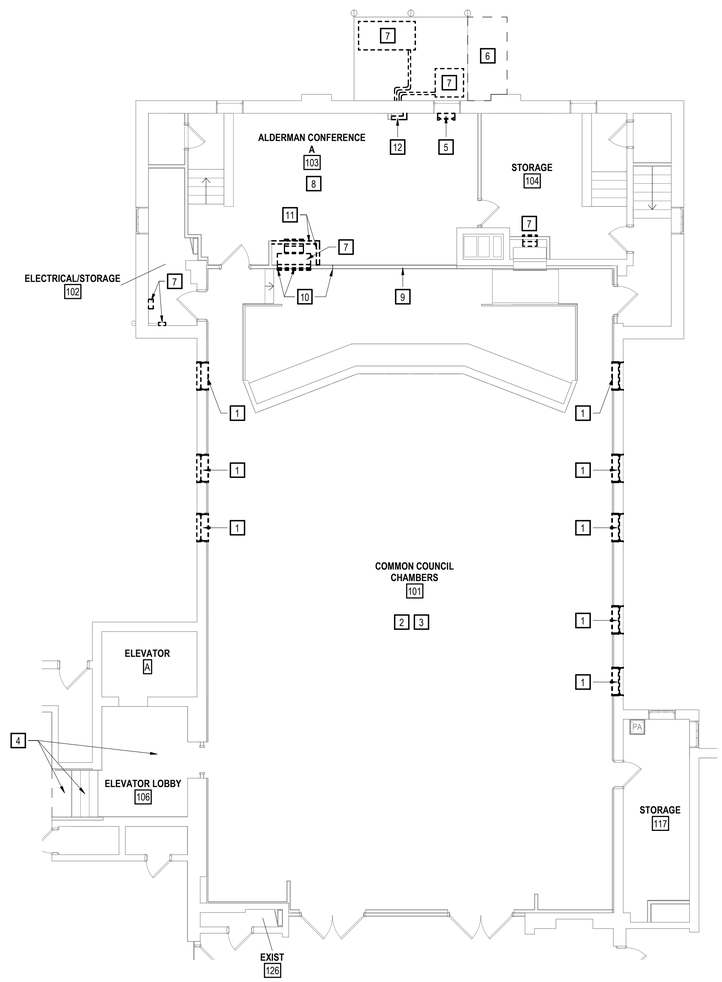


PN 1 A201 TN
## DEMOLITION PLAN
SCALE: 1/8" = 1'-0"

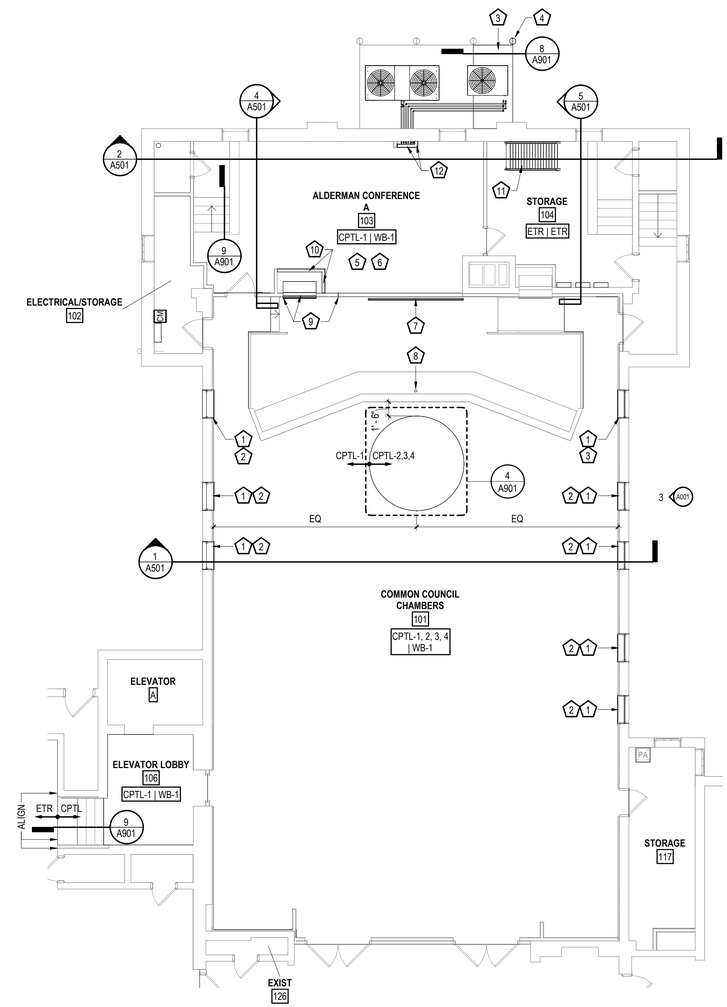


PN 2 A201 TN
## FLOOR PLAN
SCALE: 1/8" = 1'-0"

STRANG
ARCHITECTURE
ENGINEERING
INTERIOR DESIGN

MADISON, WI | WAUKESHA, WI



REVISIONS

| NO. | DESCRIPTION | DATE |
|---|---|---|

CITY OF MEQUON CITY HALL HVAC AND CHAMBERS UPGRADE
11333 N CEDARBURG ROAD
MEQUON, WI 53092

DATE: 04/05/2024
DRAWING SET: CD SET
STRANG PROJECT NO.: 2024024

DEMOLITION AND FLOOR PLAN

A201

4/4/2024 6:20:20 PM

## GENERAL DEMOLITION CEILING PLAN NOTES

1 EXISTING HISTORICAL WOOD CORNICE NEAR TOP OF WALLS IN 101 COMMON COUNCIL CHAMBERS TO REMAIN. PROTECT AND DO NOT DISTURB.

## # SPECIFIC DEMOLITION CEILING PLAN NOTES

1 REMOVE GRID, ACP AND LIGHT FIXTURES.
2 SALVAGE GRID AND ACP FOR RE-INSTALLATION.
3 REMOVE LOUVERS ABOVE. SEE MECHANICAL DRAWINGS.
4 EXISTING SOFFIT TO REMAIN.
5 PROJECTOR AND SHELF ABOVE TO BE REMOVED BY OWNER. OWNER RESPONSIBLE FOR ANY PATCHING AT WALL.
6 REFER TO MECHANICAL AND ELECTRICAL DRAWINGS FOR SPECIFIC DEMOLITION INFORMATION

## CEILING PLAN MATERIAL LEGEND

- GYPSUM BOARD CEILING
- 2' x 2' ACOUSTICAL CEILING PANELS
- 2' x 4' ACOUSTICAL CEILING PANELS
- AREA NOT WITHIN ALTERNATE SCOPE
- 2'X4' SQUARE RECESSED DOWNLIGHT, HALF SHADING INDICATES LUMINAIRE ON EMERGENCY LIGHTING.
- 1'X4' SQUARE RECESSED DOWNLIGHT
- 4" AND 6" ROUND DOWNLIGHT
- CEILING MOUNTED SPEAKER
- CEILING HUNG SPEAKER
- SPECIAL PURPOSE OUTLET
- OCCUPANCY SENSOR
- CEILING MOUNTED PENDANT LIGHT
- CEILING MOUNTED FAN
- 2'X2' DIFFUSER
- LINEAR DIFFUSER
- CLOCK
- TYPE #' - #'# — CEILING TYPE & HEIGHT TAG

## GENERAL CEILING PLAN NOTES

1 REFER TO ROOM FINISH SCHEDULE FOR ADDITIONAL INFORMATION.
2 MECHANICAL, ELECTRICAL, AND PLUMBING FIXTURES SHOWN FOR COORDINATION ONLY. REFER TO MEP DRAWINGS FOR ADDITIONAL INFORMATION.

## # SPECIFIC REFLECTED CEILING PLAN NOTES

1 RE-INSTALL SALVAGED GRID AND ACP AT SAME HEIGHT AS EXISTING.
2 36"x36" LOUVERS ABOVE. SEE MECHANICAL DRAWINGS.
3 WALLCOVERING SEAMS, TYP
4 APPLIED WOOD TRIM CENTERED OVER WALLCOVERING SEAM, TYP. SEE DETAIL 2/A901.
5 SC-2 PANEL SEAMS, TYP.
6 OWNER RESPONSIBLE FOR PAINT AT NEW GWB HEADER.
7 EXSITING CEILING AND PORTION OF WALL ABOVE WOOD CORNICE TO BE PAINTED PT-2.
8 CENTER LIGHT FIXTURES, SPEAKERS, CEILING FANS AND MECHANICAL DIFFUSERS IN SPACE BETWEEN SC-2 PIECES, TYP.
9 PATCH DRYWALL/PLASTER AROUND NEW FIXTURE AS NECESSARY. OWNER RESPONSIBLE FOR NEW PAINT.
10 CENTER DIFFUSER IN PANEL AND ALIGN WITH WALLCOVERING SEAM, TYP.

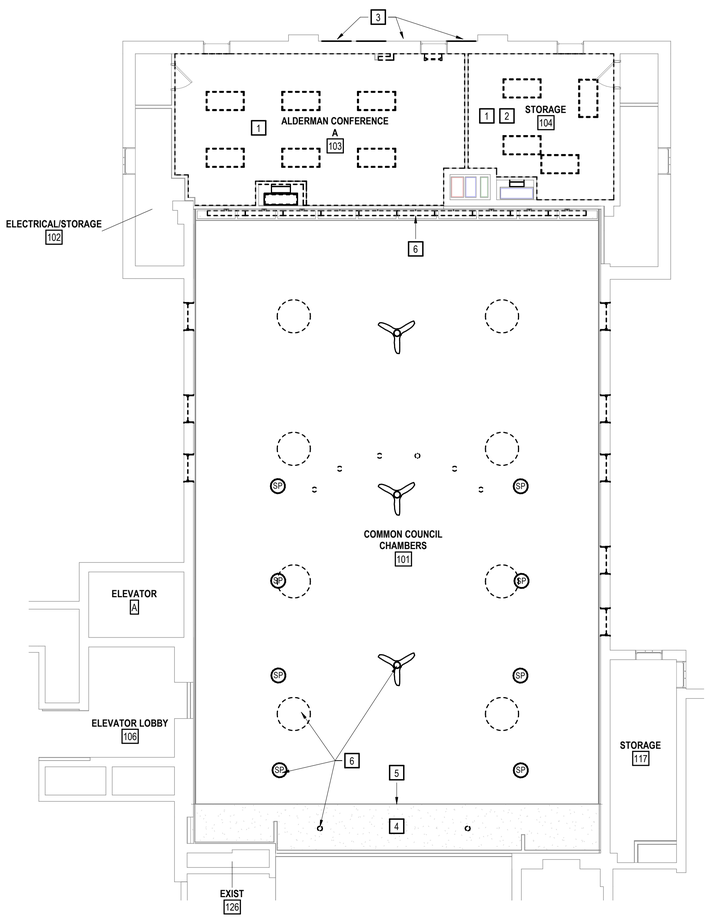


PN 1 A301 TN

### FIRST FLOOR REFLECTED CEILING DEMOLITION PLAN

SCALE: 1/8" = 1'-0"

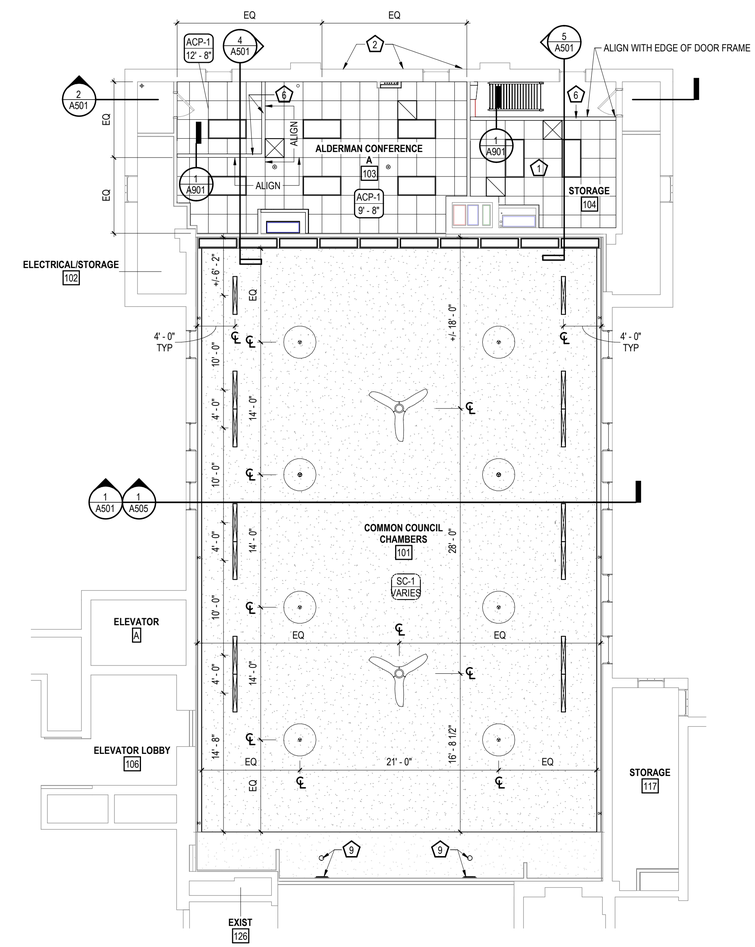


PN 2 A301 TN

### FIRST FLOOR REFLECTED CEILING PLAN - BASE BID

SCALE: 1/8" = 1'-0"

STRANG

ARCHITECTURE
ENGINEERING
INTERIOR DESIGN

MADISON, WI | WAUKESHA, WI



REVISIONS

| NO. | DESCRIPTION | DATE |
|---|---|---|

CITY OF MEQUON CITY HALL HVAC AND CHAMBERS UPGRADE
11333 N CEDARBURG ROAD
MEQUON, WI 53092

DATE: 04/05/2024
DRAWING SET CD SET
STRANG PROJECT NO. 2024024

REFLECTED CEILING PLANS - DEMOLITION AND BASE BID

A301

4/4/2024 6:20:23 PM

## CEILING PLAN MATERIAL LEGEND

- GYPSUM BOARD CEILING
- 2' x 2' ACOUSTICAL CEILING PANELS
- 2' x 4' ACOUSTICAL CEILING PANELS
- AREA NOT WITHIN ALTERNATE SCOPE
- 2'X4' SQUARE RECESSED DOWNLIGHT. HALF SHADING INDICATES LUMINAIRE ON EMERGENCY LIGHTING.
- 1'X4' SQUARE RECESSED DOWNLIGHT
- 4" AND 6" ROUND DOWNLIGHT
- CEILING MOUNTED SPEAKER
- CEILING HUNG SPEAKER
- SPECIAL PURPOSE OUTLET
- OCCUPANCY SENSOR
- CEILING MOUNTED PENDANT LIGHT
- CEILING MOUNTED FAN
- 2'X2' DIFFUSER
- LINEAR DIFFUSER
- CLOCK
- TYPE #' - ##" — CEILING TYPE & HEIGHT TAG

## GENERAL CEILING PLAN NOTES

1. REFER TO ROOM FINISH SCHEDULE FOR ADDITIONAL INFORMATION.
2. MECHANICAL, ELECTRICAL, AND PLUMBING FIXTURES SHOWN FOR COORDINATION ONLY. REFER TO MEP DRAWINGS FOR ADDITIONAL INFORMATION.

## SPECIFIC REFLECTED CEILING PLAN NOTES

1. RE-INSTALL SALVAGED GRID AND ACP AT SAME HEIGHT AS EXISTING.
2. 36"x36" LOUVERS ABOVE. SEE MECHANICAL DRAWINGS.
3. WALLCOVERING SEAMS, TYP
4. APPLIED WOOD TRIM CENTERED OVER WALLCOVERING SEAM, TYP. SEE DETAIL 2/A901.
5. SC-2 PANEL SEAMS, TYP.
6. OWNER RESPONSIBLE FOR PAINT AT NEW GWB HEADER.
7. EXSITING CEILING AND PORTION OF WALL ABOVE WOOD CORNICE TO BE PAINTED PT-2.
8. CENTER LIGHT FIXTURES, SPEAKERS, CEILING FANS AND MECHANICAL DIFFUSERS IN SPACE BETWEEN SC-2 PIECES, TYP.
9. PATCH DRYWALL/PLASTER AROUND NEW FIXTURE AS NECESSARY. OWNER RESPONSIBLE FOR NEW PAINT.
10. CENTER DIFFUSER IN PANEL AND ALIGN WITH WALLCOVERING SEAM, TYP.

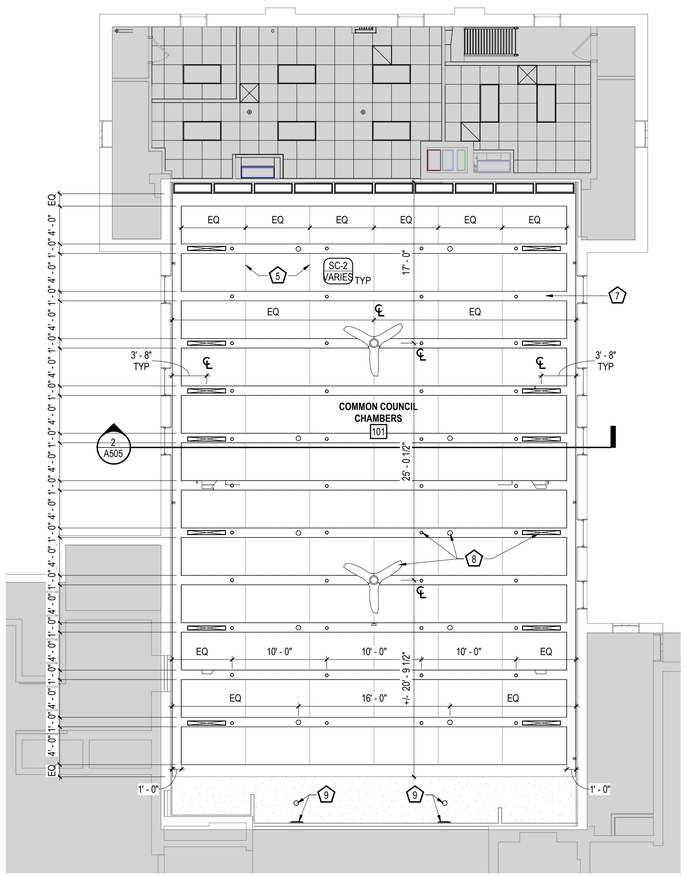


PN 1 A301A TN

## FIRST FLOOR REFLECTED CEILING PLAN - ALTERNATE 1

SCALE: 1/8" = 1'-0"

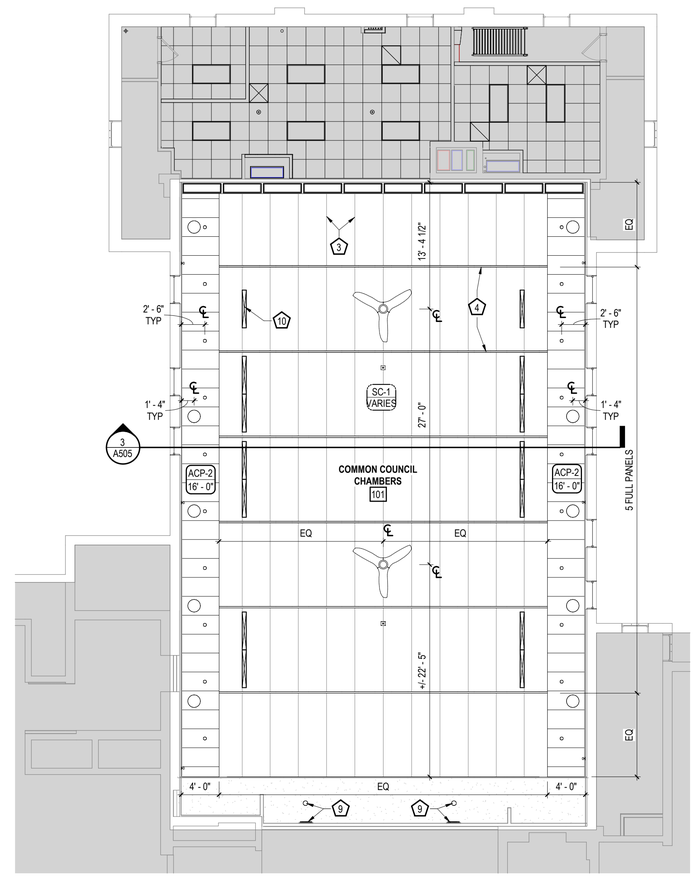


PN 2 A301A TN

## FIRST FLOOR REFLECTED CEILING PLAN - ALTERNATE 2

SCALE: 1/8" = 1'-0"

STRANG

ARCHITECTURE
ENGINEERING
INTERIOR DESIGN

MADISON, WI | WAUKESHA, WI



REVISIONS

| NO. | DESCRIPTION | DATE |
|---|---|---|

CITY OF MEQUON CITY HALL HVAC AND CHAMBERS UPGRADE

11333 N CEDARBURG ROAD
MEQUON, WI 53092

DATE: 04/05/2024
DRAWING SET CD SET
STRANG PROJECT NO. 2024024

REFLECTED CEILING PLANS - ALTERNATES 1 & 2

A301A

4/4/2024 6:20:24 PM

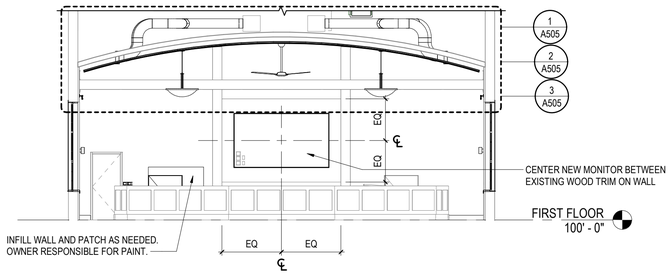


## 1 A501 BUILDING SECTION AT COMMON COUNCIL CHAMBERS

SCALE: 1/8" = 1'-0"

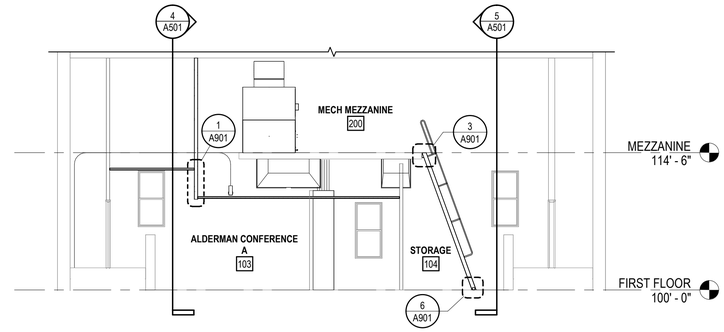


## 2 A501 BUILDING SECTION AT MECHANICAL MEZZANINE

SCALE: 1/8" = 1'-0"

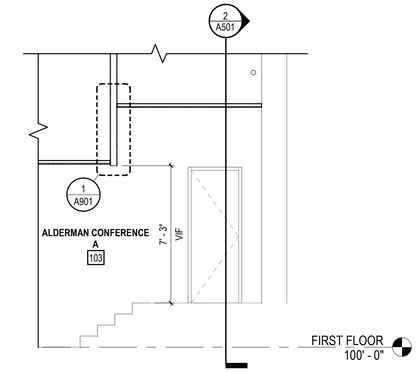


## 3 A501 SECTION AT 103 ALDERMAN CONFERENCE A STAIR

SCALE: 1/4" = 1'-0"

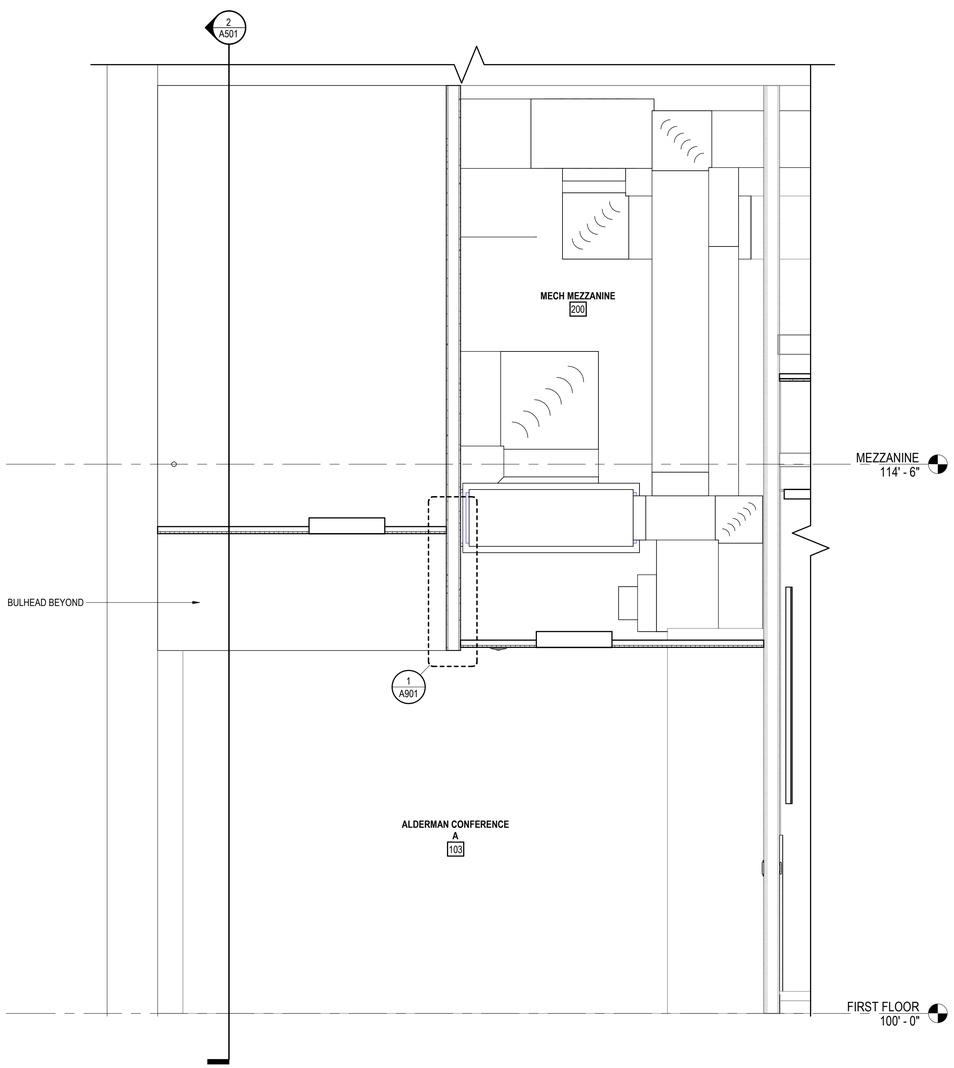


## 4 A501 SECTION AT 103 ALDERMAN CONFERENCE A

SCALE: 1/2" = 1'-0"

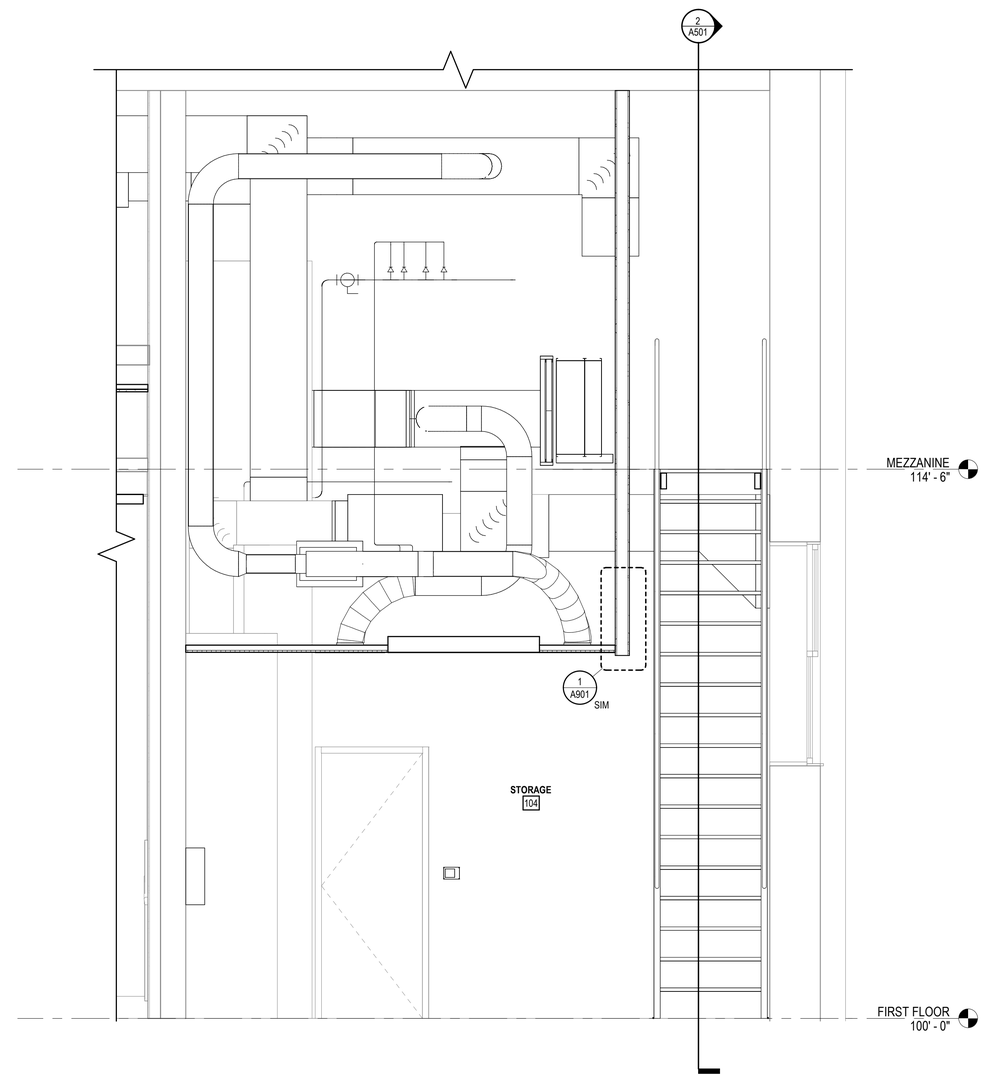


## 5 A501 SECTION AT 104 STORAGE

SCALE: 1/2" = 1'-0"

STRANG

ARCHITECTURE
ENGINEERING
INTERIOR DESIGN

MADISON, WI | WAUKESHA, WI



REVISIONS

| NO. | DESCRIPTION | DATE |
|---|---|---|

CITY OF MEQUON CITY HALL HVAC AND CHAMBERS UPGRADE

11333 N CEDARBURG ROAD
MEQUON, WI 53392

DATE: 04/05/2024
DRAWING SET CD SET
STRANG PROJECT NO. 2024024

BUILDING AND WALL SECTIONS

A501

4/4/2024 6:20:25 PM

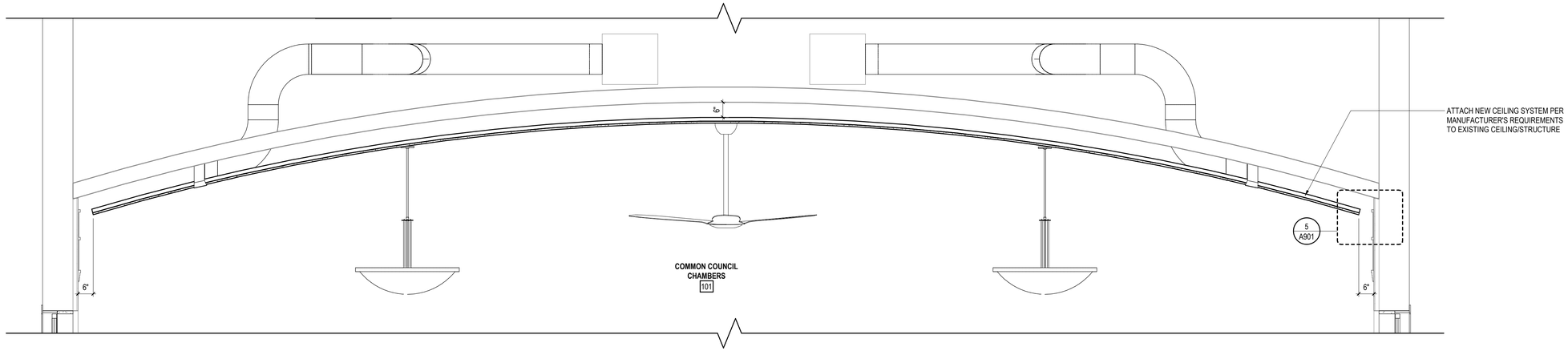


1 A505 **CEILING SECTION AT COMMON COUNCIL CHAMBERS - BASE BID**

SCALE: 1/2" = 1'-0"

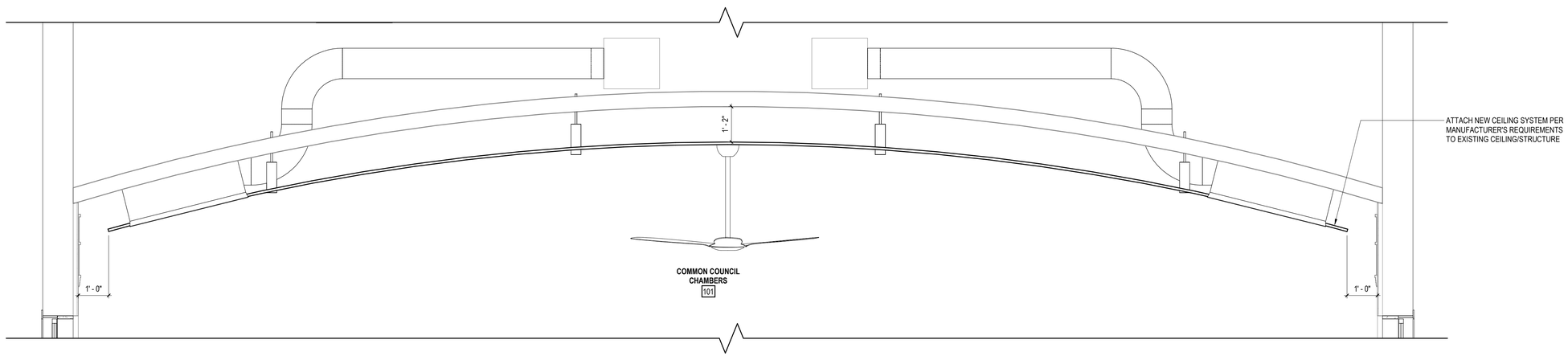


2 A505 **CEILING SECTION AT COMMON COUNCIL CHAMBERS - ALTERNATE 1**

SCALE: 1/2" = 1'-0"

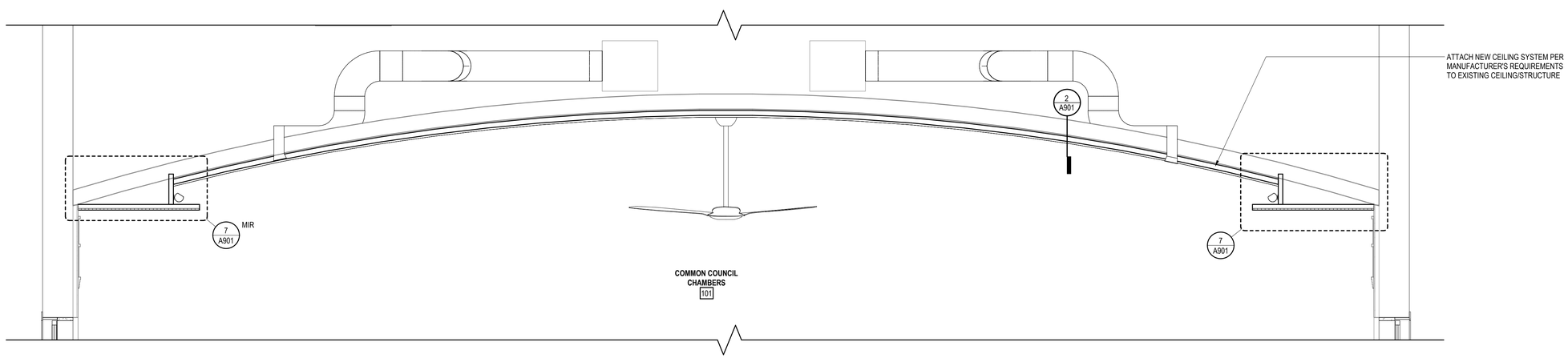


3 A505 **CEILING SECTION AT COMMON COUNCIL CHAMBERS - ALTERNATE 2**

SCALE: 1/2" = 1'-0"

STRANG
ARCHITECTURE
ENGINEERING
INTERIOR DESIGN
MADISON, WI | WAUKESHA, WI



REVISIONS

| NO. | DESCRIPTION | DATE |
|---|---|---|

CITY OF MEQUON CITY HALL HVAC AND CHAMBERS UPGRADE
11333 N CEDARBURG ROAD
MEQUON, WI 53092

DATE: 04/05/2024
DRAWING SET CD SET
STRANG PROJECT NO. 2024024

CEILING SECTIONS

A505

4/4/2024 6:20:25 PM

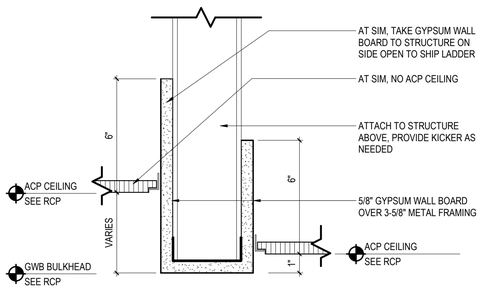


## 1 A901 SUSPENDED CEILING AT BULKHEAD

SCALE: 3" = 1'-0"

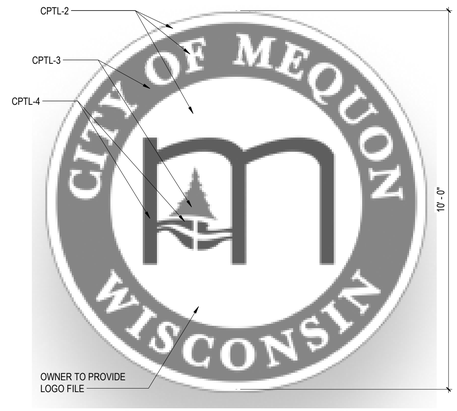


## 4 A901 CUSTOM LOGO IN CARPET TILE

SCALE: 1/2" = 1'-0"

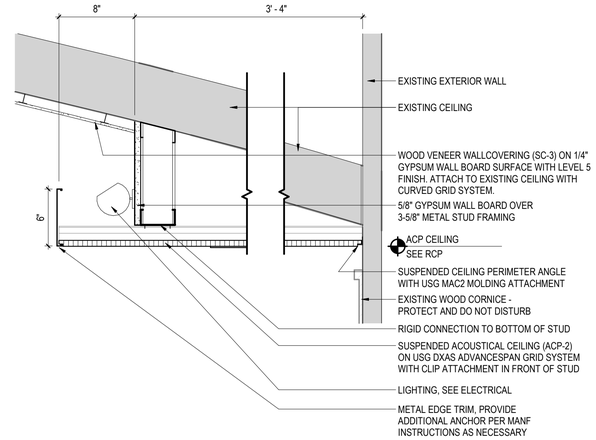


## 7 A901 PERIMETER CEILING SECTION - ALTERNATE 2

SCALE: 1 1/2" = 1'-0"

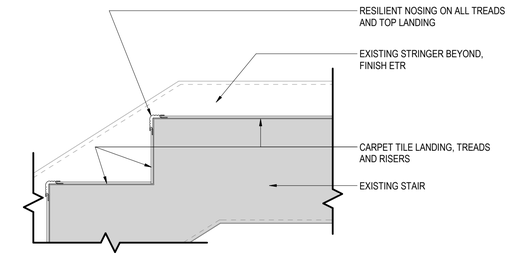


## 9 A901 STAIR AT TOP STEP - CARPET TILE

SCALE: 1 1/2" = 1'-0"

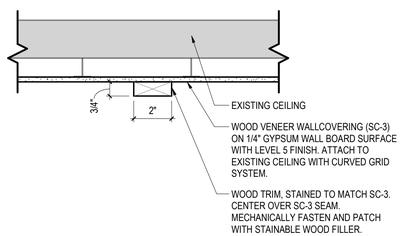


## 2 A901 CEILING WOOD TRIM - ALTERNATE 2

SCALE: 3" = 1'-0"

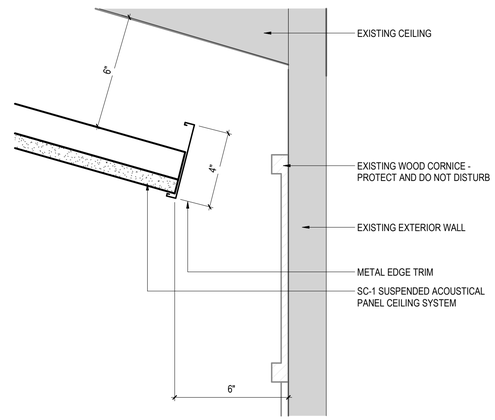


## 5 A901 PERIMETER CEILING SECTION - BASE BID

SCALE: 3" = 1'-0"

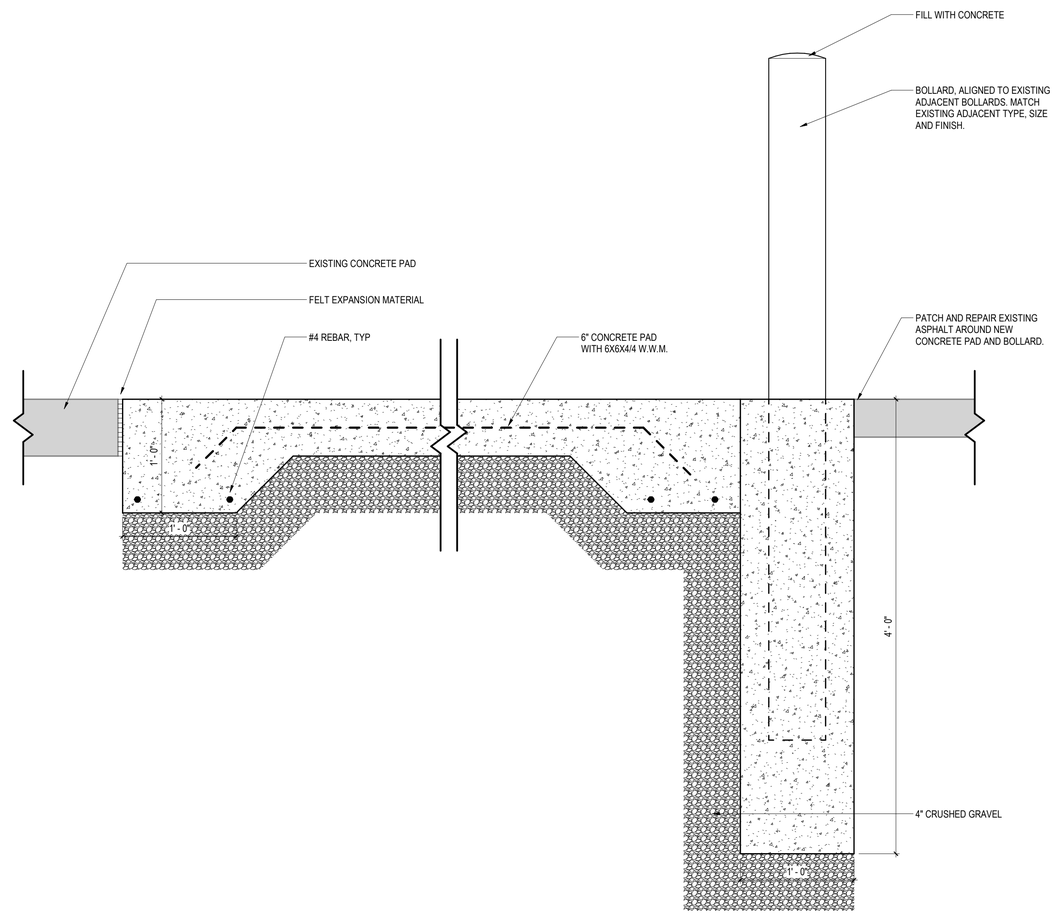


## 8 A901 EQUIPMENT PAD DETAIL

SCALE: 1 1/2" = 1'-0"

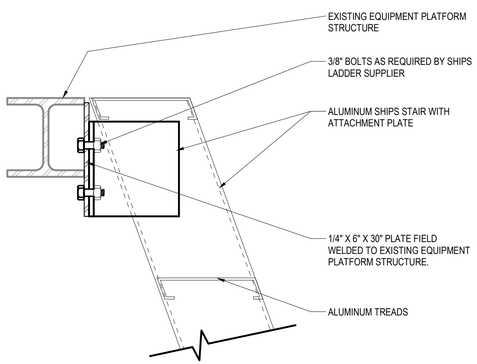


## 3 A901 SHIPS STAIR - TOP TREAD ATTACHMENT

SCALE: 3" = 1'-0"

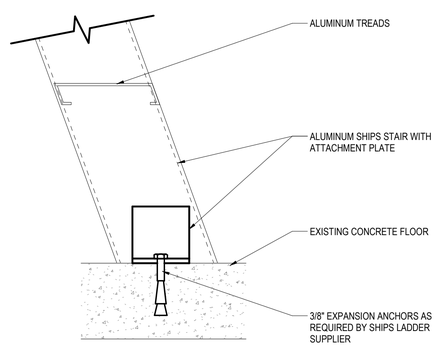


## 6 A901 SHIP LADDER - BASE ATTACHMENT

SCALE: 3" = 1'-0"


STRANG
ARCHITECTURE
ENGINEERING
INTERIOR DESIGN
MADISON, WI | WAUKESHA, WI




REVISIONS

| NO. | DESCRIPTION | DATE |
|---|---|---|

CITY OF MEQUON CITY HALL HVAC AND CHAMBERS UPGRADE
11333 N CEDARBURG ROAD
MEQUON, WI 53092

DATE: 04/05/2024
DRAWING SET CD SET
STRANG PROJECT NO. 2024024

INTERIOR DETAILS

A901

4/4/2024 6:20:26 PM

## VARIABLE FREQUENCY DRIVE

| VFD | LOCATION | SERVES | MOTOR HP | ELECTRICAL VOLTAGE | ELECTRICAL PHASE | MANUF. | MODEL |
|---|---|---|---|---|---|---|---|
| 1 | BALCONY STORAGE 201 | RE-1 | 1 1/2 | 240 | 3 | ABB | 550 |
| 2 | STORAGE 104 | RE-2 | 3/4 | 240 | 3 | ABB | 550 |
| 3 | STORAGE 104 | AHU-1 | 6 | 240 | 3 | ABB | 550 |
| 4 | STORAGE 104 | AHU-2 | 2 | 240 | 3 | ABB | 550 |

## DESTRATIFICATION FANS

| DF | SERVES | FAN DIA. | MOTOR WATTS | CAPACITY CONTROL | VOLTAGE | PHASE | MANUF. | MODEL | REMARKS |
|---|---|---|---|---|---|---|---|---|---|
| 1 | 101 COMMON COUNCIL CHAMBERS | 7' - 0" | 43 | VFD | 120 V | 1 | BIG ASS FANS | HAIKU | 32" DOWNROD |
| 1 | 101 COMMON COUNCIL CHAMBERS | 7' - 0" | 43 | VFD | 120 V | 1 | BIG ASS FANS | HAIKU | 32" DOWNROD |

## DIFFUSER, REGISTER, GRILLE

| MIN AIRFLOW (CFM) | MAX AIRFLOW (CFM) | SERVICE | FACE SIZE | NECK SIZE | MOUNTING | MANUF. | MODEL | REMARKS |
|---|---|---|---|---|---|---|---|---|
| LS-1 | | | | | | | | |
| 0 | 410 | LINEAR | 48"x5 3/16" | 12" | SURFACE | TITUS | LS-10 | 2-SLOT, JET THROW, CUSTOM PLENUM |
| RG-1 | | | | | | | | |
| 121 | 200 | RETURN | 24"x24" | 8" | LAY-IN | TITUS | 50F | |
| 301 | 475 | RETURN | 24"x24" | 12" | LAY-IN | TITUS | 50F | |
| SD-1 | | | | | | | | |
| 100 | 210 | SUPPLY | 24"x24" | 8" | LAY-IN | TITUS | OMNI | |
| 211 | 330 | SUPPLY | 24"x24" | 10" | LAY-IN | TITUS | OMNI | |

## ROOF EXHAUSTERS

| RE | SERVES | CFM OF STD. AIR | FAN DIA. | MAX. SONES | EXT. S.P. IN IN. WATER | MOTOR HP | DRIVE | BACKDRAFT DAMPER | VOLTAGE | PHASE | MANUF. | MODEL | REMARKS |
|---|---|---|---|---|---|---|---|---|---|---|---|---|---|
| 1 | AHU-1 | 5700 | 50" | 12.6 | 0.75 | 1 1/2 | BELT | MOTORIZED | 240 | 3 | GREENHECK | GB-260 | |
| 2 | AHU-2 | 3000 | 36" | 12.4 | 0.75 | 3/4 | BELT | MOTORIZED | 240 | 3 | GREENHECK | GB-180 | |

## UNIT HEATERS

| UH | SERVES | TYPE | CAP. MBH | CFM OF STD. AIR | MOTOR HP | MOTOR SPEED | ENT. H2O TEMP. | LV. H2O TEMP. | GPM | BRANCH PIPE SIZE | ELEV. ABOVE MEZZ. | MANUF. | MODEL | UNIT ELECTRICAL VOLT | UNIT ELECTRICAL PH | REMARKS |
|---|---|---|---|---|---|---|---|---|---|---|---|---|---|---|---|---|
| 1 | 200 MECH MEZZONINE | HORIZONTAL | 77,130 | 1,775 | 1/8 | 1075 | 180 °F | 140 °F | 4.5 | 1" | 10' - 0" | RITTLING | RH-121 | 120 | 1 | |

## HOT WATER VARIABLE AIR VOLUME BOXES

| VAV | SERVICE | BOX MAX AIRFLOW (CFM) COOLING | BOX MAX AIRFLOW (CFM) HEATING | BOX MIN AIRFLOW (CFM) OCCUPIED | BOX MIN AIRFLOW (CFM) UNOCCUPIED | BOX INLET SIZE | INLET DUCT SIZE | MAX. AIR P.D. IN IN. OF WATER | HEATING COIL ENT. AIR TEMP. | HEATING COIL LV. AIR TEMP. | HEATING COIL ENT. H2O TEMP. | HEATING COIL LV. H20 TEMP. | HEATING COIL GPM | HEATING COIL BRANCH PIPE SIZE | COIL INFO | MANUF. | MODEL | REMARKS |
|---|---|---|---|---|---|---|---|---|---|---|---|---|---|---|---|---|---|---|
| 2-1 | 101 COMMON COUNCIL CHAMBERS | 2920 | 875 | 820 | 0 | 24"x16" | 24"x16" | 0.5 | 55 °F | 100 °F | 180 °F | 160 °F | 4.3 | 1" | 2 ROW COIL | PRICE | SDV | PROVIDE DISCHARGE SILENCER |
| 2-2 | 103 ALDERMAN CONFERENCE ROOM | 325 | 275 | 75 | 0 | 8" | 10" | 0.5 | 55 °F | 100 °F | 180 °F | 160 °F | 1.4 | 3/4" | 2 ROW COIL | PRICE | SDV | |
| 2-3 | 104 STORAGE | 155 | 145 | 35 | 0 | 6" | 8" | 0.5 | 55 °F | 100 °F | 180 °F | 160 °F | 0.8 | 3/4" | 2 ROW COIL | PRICE | SDV | |

## AIR COOLED COMPRESSOR-CONDENSING UNIT

| ACCU | COMPRESSOR LOCATION | COMPRESSOR SERVICE | COMPRESSOR NO. OF COMP. | COMPRESSOR NOM. CAP. TONS | COMPRESSOR SUCTION TEMP. | COMPRESSOR REF. TYPE | COMPRESSOR % CAP. STEPS OF REDUCTION | COMPRESSOR EER | CONDENSER ENT. AIR TEMP. | CONDENSER NO. OF FANS | CONDENSER FAN TYPE | CONDENSER DRIVE | CONDENSER SUPPORT | DESIGN DIMENSIONS WEIGHT | ELECTRICAL VOLT | ELECTRICAL PH | ELECTRICAL MCA | ELECTRICAL MOCP | MANUF. | MODEL | REMARKS |
|---|---|---|---|---|---|---|---|---|---|---|---|---|---|---|---|---|---|---|---|---|---|
| 1 | GRADE | AHU-1 | 2 | 20.0 | 42 | R-410A | 0-50-100 | 12.1 | 95 °F | 2 | PROP | DIRECT | GROUND | 800.00 | 240 | 3 | 97 | 125 | TRANE | TTA24 | |
| 2 | GRADE | AHU-2 | 2 | 12.5 | 43 | R-410A | 0-50-100 | 12 | 95 °F | 1 | PROP | DIRECT | GROUND | 725.00 | 240 | 3 | 64 | 90 | TRANE | TTA15 | |

## AIR HANDLING UNITS

| AHU | UNIT SERVICE | UNIT TYPE | CFM OF STD. AIR | MIN CFM OF O.A. | EXT. S.P. IN IN. WATER | NO. OF FANS | FAN WHEEL TYPE | DRIVE TYPE | MOTOR HP | FACE & BYPASS TYPE | FILTER TYPE | VOLUME CONTROL | SUPPORT | VIBRATION ISOLATORS TYPE | VIBRATION ISOLATORS MIN. STATIC DEFL. | HEATING COIL MAX. FACE VEL. | HEATING COIL ENT. AIR TEMP. | HEATING COIL LV. AIR TEMP. | HEATING COIL ENT. H2O TEMP. | HEATING COIL LV. H2O TEMP. | HEATING COIL MAX. H2O P.D. IN FT. | HEATING COIL GPM | HEATING COIL BRANCH PIPE SIZE | COOLING COIL MAX. FACE VEL. | COOLING COIL ENT. AIR D.B. | COOLING COIL ENT. AIR W.B. | COOLING COIL LV. AIR D.B. | COOLING COIL LV. AIR W.B. | COOLING COIL SUCTION TEMP. | WEIGHT LBS | ELECTRICAL VOLTAGE | ELECTRICAL PHASE | ELECTRICAL MCA | ELECTRICAL MOCP | MANUF. | MODEL | REMARKS |
|---|---|---|---|---|---|---|---|---|---|---|---|---|---|---|---|---|---|---|---|---|---|---|---|---|---|---|---|---|---|---|---|---|---|---|---|---|---|
| 1 | 101 COMMON COUNCIL CHAMBERS | INDOOR | 5,700 | 1,140 | 1.25 | 1 | PLENUM | DIRECT | 6 | NO | 2" PLEATED | VFD | EXISTING PLATFORM | SPRING | 2" | 463 FPM | 43 °F | 90 °F | 180 °F | 140 °F | 0.56 | 11.5 | 1 1/4" | 471 FPM | 77 °F | 65 °F | 53 °F | 51 °F | 41 °F | 1400 | 240 | 3 | 14 | 20 | TRANE | CSAA012 | |
| 2 | BASEMENT AND CONFERENCE | INDOOR | 3,400 | 900 | 1.75 | 1 | PLENUM | DIRECT | 2 | NO | 2" PLEATED | VFD | EXISTING PLATFORM | SPRING | 2" | 445 FPM | 48 °F | 80 °F | 180 °F | 140 °F | 0.16 | 4.2 | 1" | 445 FPM | 77 °F | 66 °F | 52 °F | 51 °F | 41 °F | 700 | 240 | 3 | 13 | 20 | TRANE | UCCAM08 | |

## MECHANICAL SYMBOLS AND ABBREVIATIONS

### MECHANICAL SYMBOL LEGEND

- SA OR OA DUCT RISER
- SA OR OA DUCT DROP
- RA OR TA DUCT RISER
- RA OR TA DUCT DROP
- EA DUCT RISER
- EA DUCT DROP
- TURNING VANES
- 1" LINED DUCT
- MOD — MOTOR OPERATED DAMPER
- VOLUME DAMPER
- VAV TERMINAL UNIT

### PIPING SYMBOL LEGEND

- PIPING TOP TAKE-OFF
- PIPING BOTTOM TAKE-OFF
- CAPPED PIPE
- AUTOMATIC CONTROL VALVE
- BALL VALVE
- CALIBRATED BALANCING VALVE

### AIR DEVICE LEGEND & TAG

- SUPPLY AIR DEVICE
- RETURN / TRANSFER AIR DEVICE
- TAG / CFM — AIR DEVICE TAG

### MISC SYMBOL LEGEND

- CONNECT TO EXISTING
- T — THERMOSTAT / TEMPERATURE SENSOR
- CO2 — CO2 SENSOR

### GENERAL ABBREVIATIONS

| | |
|---|---|
| ACD | AUTOMATIC CONTROL DAMPER |
| ACV | AUTOMATIC CONTROL VALVE |
| AFF | ABOVE FINISH FLOOR |
| AFMS | AIRFLOW MEASURING STATION |
| BAS | BUILDING AUTOMATION SYSTEM |
| CBV | CALIBRATED BALANCING VALVE |
| DN | DOWN |
| EXH | EXHAUST |
| HC | HEATING COIL |
| MOD | MOTOR OPERATED DAMPER |
| NC | NORMALLY CLOSED |
| NO | NORMALLY OPEN |
| OED | OPEN END DUCT |
| TCP | TEMPERATURE CONTROL PANEL |
| TOD | TOP OF DUCT |
| TYP | TYPICAL |
| VD | VOLUME DAMPER |

### AIR DEVICE TAG ABBREVIATIONS

| | |
|---|---|
| SD | SUPPLY DIFFUSER |
| LS | LINEAR SUPPLY DIFFUSER |
| RG | RETURN GRILLE |

### SYSTEMS ABBREVIATIONS

| | |
|---|---|
| OA | OUTSIDE AIR |
| RA | RETURN AIR |
| REA | RELIEF AIR |
| SA | SUPPLY AIR |
| HWS | HOT WATER SUPPLY |
| HWR | HOT WATER RETURN |

## GENERAL MECHANICAL NOTES

1. PROVIDE VOLUME DAMPERS AT EACH BRANCH TAKE-OFF IN ALL SUPPLY AND RETURN DUCTWORK. LOCATE VOLUME DAMPERS AS CLOSE TO THE BRANCH TAKE-OFF AS POSSIBLE.
2. DUCT SIZE TO DIFFUSERS, REGISTERS AND GRILLES SHALL BE SAME SIZE AS NECK SIZE UNLESS OTHERWISE NOTED.
3. INLET DUCT SIZE TO SUPPLY AIR TERMINAL SHALL BE SAME AS INLET UNLESS OTHERWISE NOTED.
4. COORDINATE DIFFUSER, REGISTER, GRILLE AND ACCESS PANEL LOCATIONS WITH REFLECTED CEILING PLAN.
5. PROVIDE FLEXIBLE DUCTWORK FOR FINAL CONNECTIONS TO SUPPLY DIFFUSER AND GRILLES UNLESS OTHERWISE NOTED IN SPECIFICATIONS. FLEXIBLE DUCT SIZE SHALL BE SAME AS NECK SIZE OF DIFFUSER OR GRILLE. REFER TO SPECIFICATIONS FOR FLEXIBLE DUCT REQUIREMENTS. FLEXIBLE DUCTS ARE NOT ALLOWED ABOVE NON-ACCESSIBLE CEILINGS.
6. FLOOR PLANS INCLUDE PIPE ROUTING AND MAJOR VALVING. REFER TO DETAILS, AND SPECIFICATIONS FOR ADDITIONAL VALVING AND PIPING SPECIALTIES.
7. INSTALL BRANCH HOT WATER PIPING WITH A MINIMUM OF THREE ELBOWS TO ALL TERMINAL HEATING DEVICES FOR EXPANSION AND CONTRACTION OF PIPING SYSTEM.
8. FOR BRANCH MAIN TAKE-OFFS SERVING TWO OR MORE AIR TERMINAL BOXES PROVIDE ISOLATION VALVES ON SUPPLY PIPING AND CALIBRATED BALANCING VALVES ON RETURN PIPING.
9. ALL CONTRACTORS SHALL FIELD VERIFY LAYOUT AND MANUFACTURERS INSTALLATION REQUIREMENTS FOR ACTUAL EQUIPMENT PROVIDED.
10. ALL CONTRACTORS SHALL COORDINATE LOCATIONS OF HVAC MAINS, BRANCHES, PIPING, ETC WITH ALL OTHER TRADES PRIOR TO INSTALLATION.
11. NO PIPING OR DUCTS SHALL BE INSTALLED ABOVE ELECTRICAL EQUIPMENT, UNLESS OTHERWISE NOTED. REFER TO ELECTRICAL DRAWINGS FOR ELECTRICAL EQUIPMENT LOCATIONS. COORDINATE WITH DIVISION 26 FOR EXACT LOCATIONS.
12. COORDINATE THE LOCATIONS OF DIFFUSERS, REGISTERS AND GRILLES WITH ARCHITECTURAL REFLECTED CEILING PLAN, ELECTRICAL LIGHT FIXTURES, LIGHT FIXTURE SUPPORT RODS, AND FIRE SPRINKLER HEADS FOR FREE INTERFERENCE.
13. ALL WALL-MOUNTED GRILLES SHALL BE ALIGNED VERTICALLY AND HORIZONTALLY WHENEVER POSSIBLE
14. AIR TERMINAL UNIT ACTUATOR AND CONTROLLER TO BE MOUNTED ON THE SAME SIDE AS REHEAT COIL PIPING. REHEAT COIL PIPING TO RUN ABOVE ACTUATOR AND CONTROLLER TO ALLOW ACCESS.
15. ECCENTRIC REDUCERS SHALL BE USED UNLESS NOTED OTHERWISE.
16. MAINTAIN ACCESS TO AIR TERMINAL BOX CONTROLLER AND REHEAT COIL PIPING CONNECTIONS. INSTALL AIR TERMINAL BOXES AT A HEIGHT THAT IS EASILY ACCESSED. DO NOT INSTALL THE TOP OF ANY AIR TERMINAL BOX HIGHER THAN 36" ABOVE THE FINISHED CEILING UNLESS NOTED OTHERWISE.
17. OPEN ENDED DUCT (OED) SHALL BE COVERED WITH WIRE MESH SCREEN.
18. REFER TO DIVISION 1 DOCUMENT FOR ALTERNATES.
19. PROVIDE FLEXIBLE DUCT CONNECTIONS AT ALL DUCTWORK CONNECTIONS TO AIR HANDLING UNITS, RETURN FANS AND EXHAUST FANS.
20. ALL WORK BY OTHERS SHOWN IS BASED ON AVAILABLE INFORMATION. CONTRACTOR TO VERIFY LOCATIONS AND FIELD CONDITIONS PRIOR TO START OF WORK.
21. NO SERVICE SHALL BE INTERRUPTED OR CHANGED WITHOUT WRITTEN PERMISSION FROM OWNER.
22. WHERE WORK INTERFERES WITH OWNER'S USE OF PREMISES, SCHEDULE WORK THROUGH OWNER TO MINIMIZE INCONVENIENCE TO OWNER. OWNER MUST APPROVE SCHEDULE IN WRITING BEFORE CONTRACTOR BEGINS ANY SUCH WORK.


STRANG
ARCHITECTURE
ENGINEERING
INTERIOR DESIGN
MADISON, WI | WAUKESHA, WI




REVISIONS

| NO. | DESCRIPTION | DATE |
|---|---|---|

CITY OF MEQUON CITY HALL HVAC AND CHAMBERS UPGRADE
11333 N CEDARBURG ROAD
MEQUON, WI 53092

DATE: 04/05/2024
DRAWING SET: CD SET
STRANG PROJECT NO.: 2024024

MECHANICAL SYMBOLS, ABBREVIATIONS AND GENERAL NOTES

M001

4/5/2024 8:48:27 AM

## # SPECIFIC PLAN NOTES

1 REMOVE EXISTING DIFFUSER AND ASSOCIATED DUCTWORK.

2 REMOVE EXISTING DUCTWORK TO POINT INDICATED.

3 REMOVE EXISTING PIPING TO POINT INDICATED.

4 REMOVE EXISTING AIR COOLED CONDENSING UNIT, ASSOCIATED REFRIGERANT PIPING, SUPPORT, AND CONTROLS.

5 REMOVE EXISTING AIR HANDLING UNIT, ASSOCIATED HOT WATER PIPING, REFRIGERANT PIPING, DUCTWORK, SUPPORT, AND CONTROLS.

6 REMOVE EXISTING UNIT HEATER, ASSOCIATED HOT WATER PIPING, SUPPORT, AND CONTROLS.

7 REMOVE EXISTING HVAC EQUIPMENT CONTROLS AND ASSOCIATED CONDUIT/WIRING.

8 REMOVE EXISTING DDC BACNET CONTROLLER AND STORE FOR REINSTALLATION.

9 REMOVE EXISTING DESTRATIFICATION FAN AND ASSOCIATED CONTROLS.

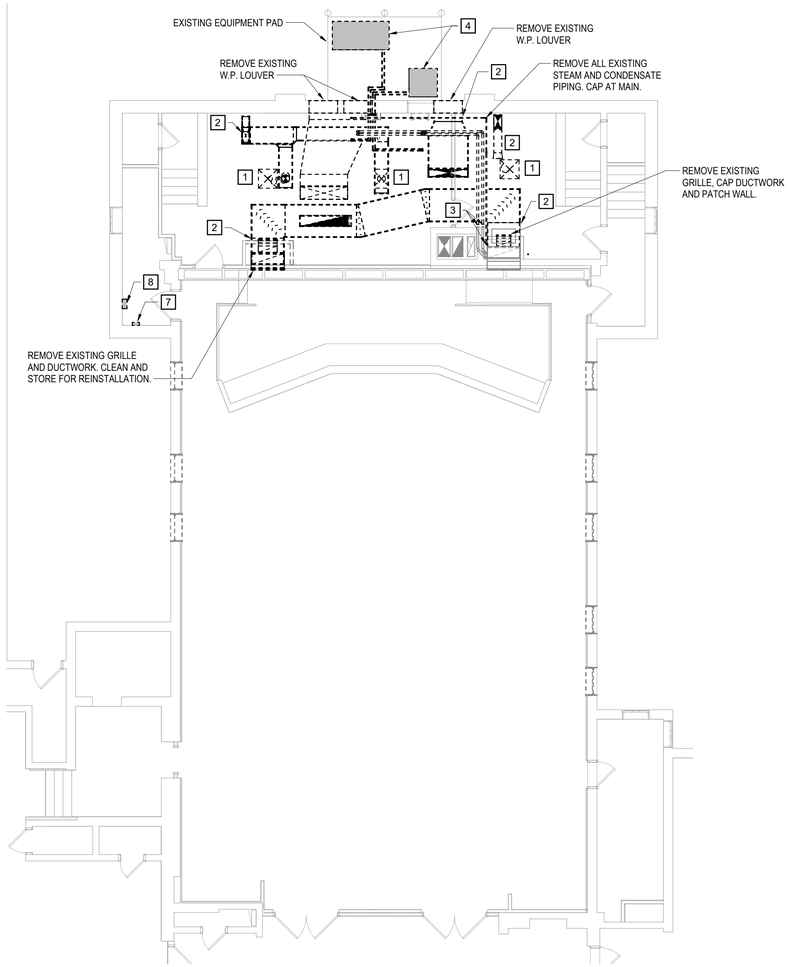


PN 1 M100 TN

### FIRST FLOOR MECHANICAL DEMOLITION PLAN

SCALE: 1/8" = 1'-0"

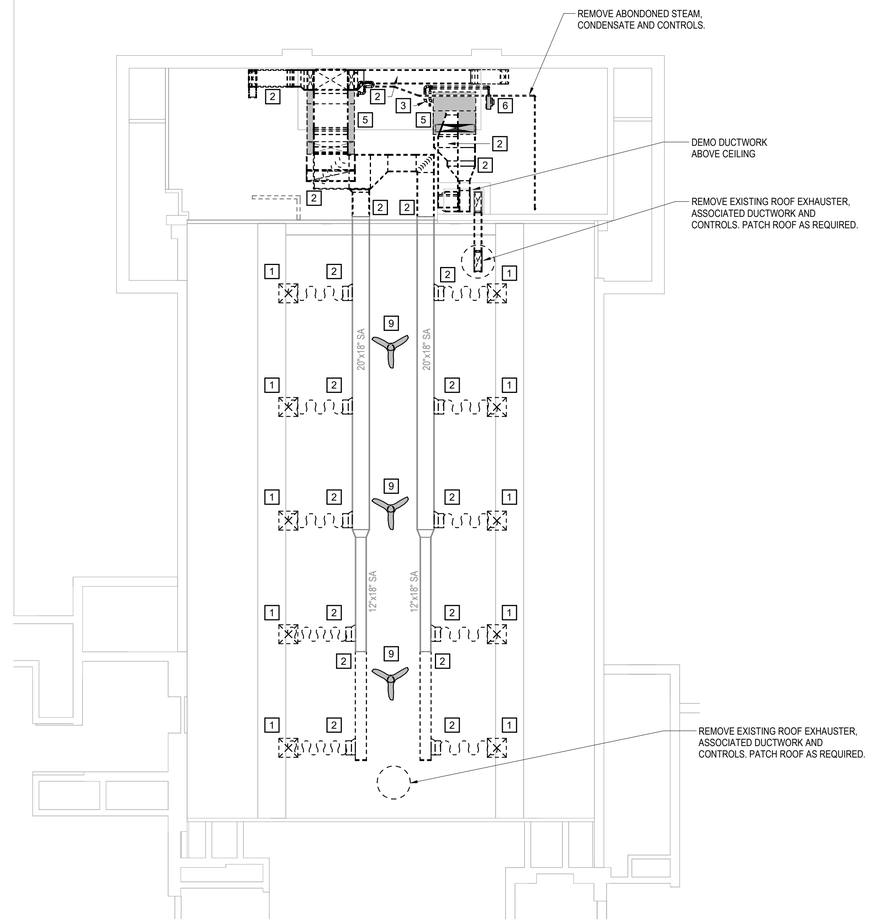


PN 2 M100 TN

### MECHANICAL PLATFORM MECHANICAL DEMOLITION PLAN

SCALE: 1/8" = 1'-0"


STRANG

ARCHITECTURE
ENGINEERING
INTERIOR DESIGN

MADISON, WI | WAUKESHA, WI




REVISIONS

| NO. | DESCRIPTION | DATE |
|---|---|---|

CITY OF MEQUON CITY HALL HVAC AND CHAMBERS UPGRADE

11333 N CEDARBURG ROAD
MEQUON, WI 53092

DATE: 04/05/2024
DRAWING SET CD SET
STRANG PROJECT NO. 2024024

MECHANICAL DEMOLITION PLANS

M100

4/5/2024 8:48:29 AM

## # SPECIFIC PLAN NOTES

1 3/4" HWS FROM ABOVE. 3/4" HWR UP.

2 1" HWS UP. 1" HWR DN.

3 REFRIGERANT PIPING DN FROM ABOVE.

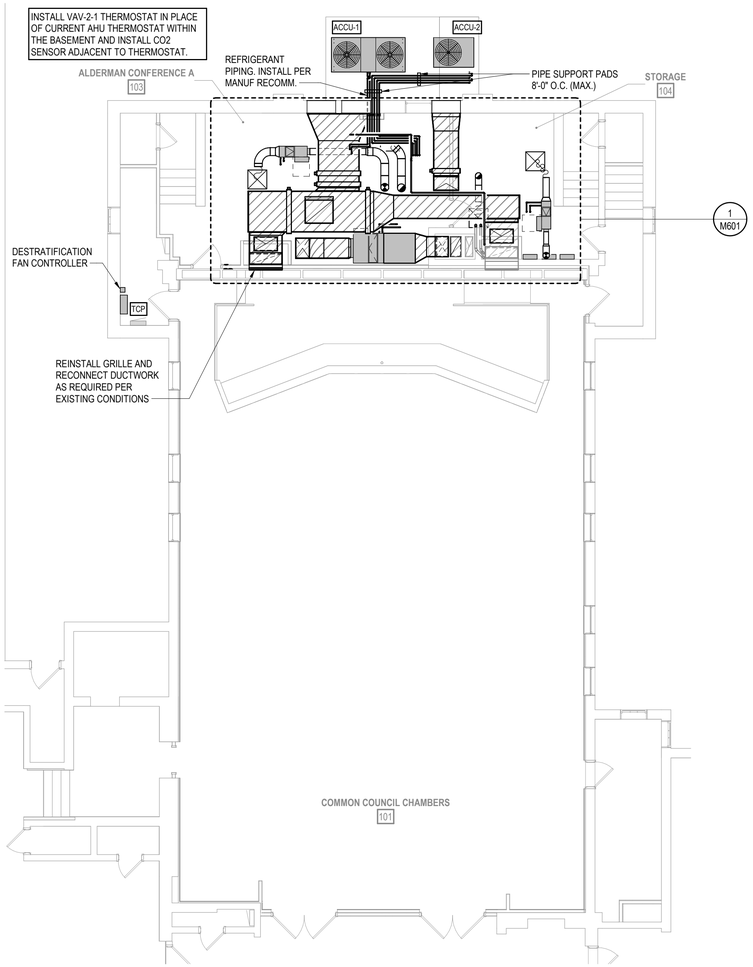


PN 1 M200 TN

## FIRST FLOOR MECHANICAL PLAN

SCALE: 1/8" = 1'-0"

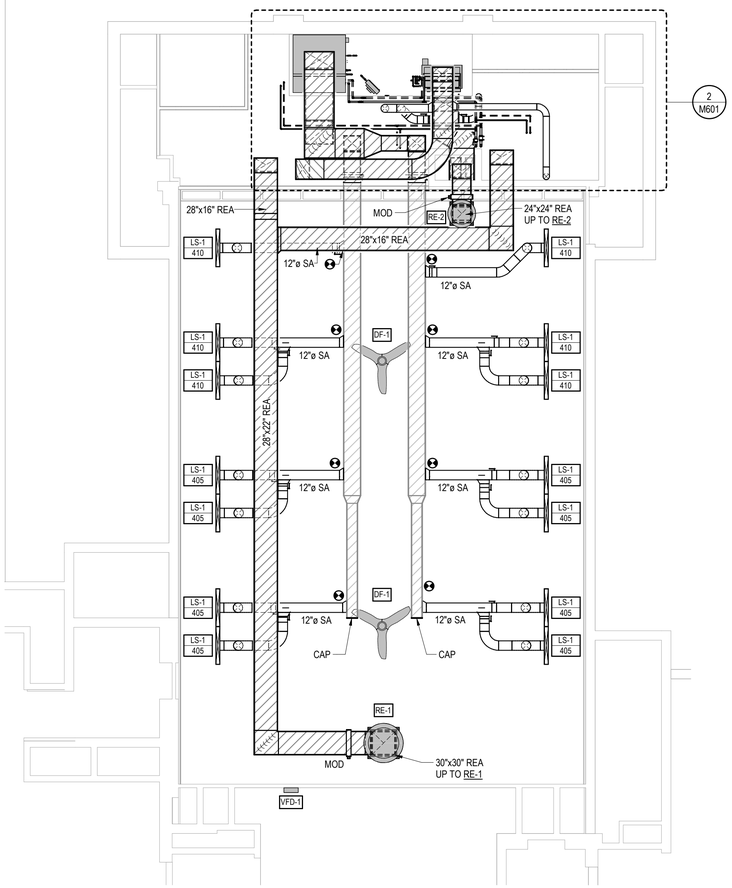


PN 2 M200 TN

## UPPER LEVEL MECHANICAL PLAN - BASE BID

SCALE: 1/8" = 1'-0"

STRANG

ARCHITECTURE
ENGINEERING
INTERIOR DESIGN

MADISON, WI | WAUKESHA, WI



REVISIONS

| NO. | DESCRIPTION | DATE |
|---|---|---|

CITY OF MEQUON CITY HALL HVAC AND CHAMBERS UPGRADE

11333 N CEDARBURG ROAD
MEQUON, WI 53092

DATE: 04/05/2024
DRAWING SET CD SET
STRANG PROJECT NO. 2024024

MECHANICAL PLANS

M200

4/5/2024 9:15:27 AM

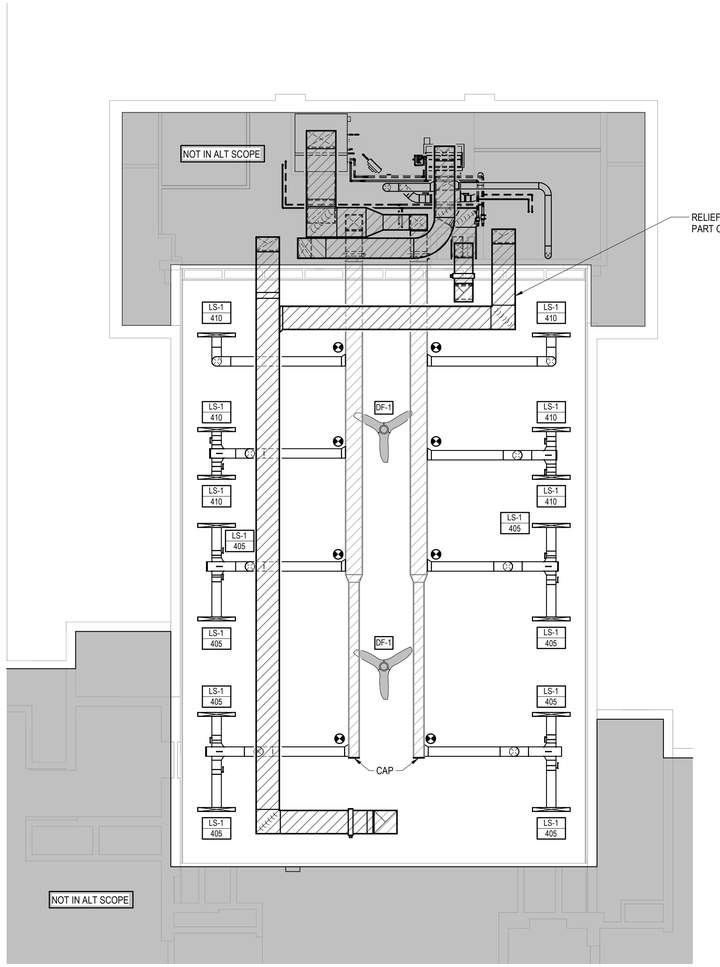


PN
1
M201
TN

## SECOND FLOOR MECHANICAL - ALTERNATE BID 1

SCALE: 1/8" = 1'-0"

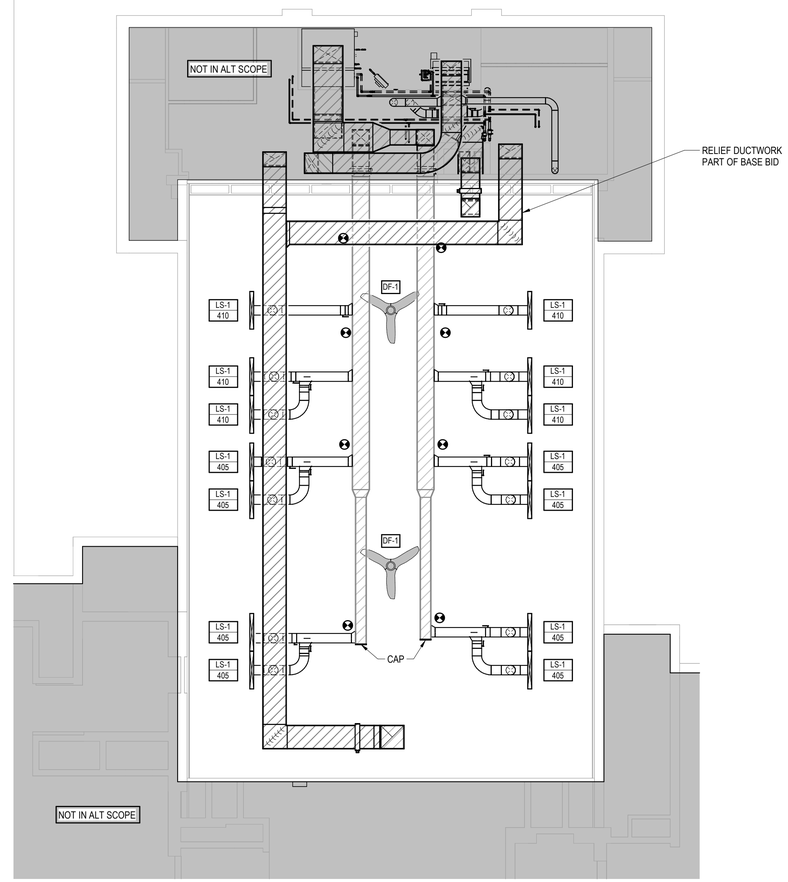


PN
2
M201
TN

## SECOND FLOOR MECHANICAL - ALTERNATE BID 2

SCALE: 1/8" = 1'-0"

STRANG

ARCHITECTURE
ENGINEERING
INTERIOR DESIGN

MADISON, WI | WAUKESHA, WI



REVISIONS

| NO. | DESCRIPTION | DATE |
|---|---|---|

CITY OF MEQUON CITY HALL HVAC AND CHAMBERS UPGRADE

11333 N CEDARBURG ROAD
MEQUON, WI 53092

DATE: 04/05/2024
DRAWING SET CD SET
STRANG PROJECT NO. 2024024

MECHANICAL ALTERNATE BID PLANS

M201

4/5/2024 8:48:35 AM

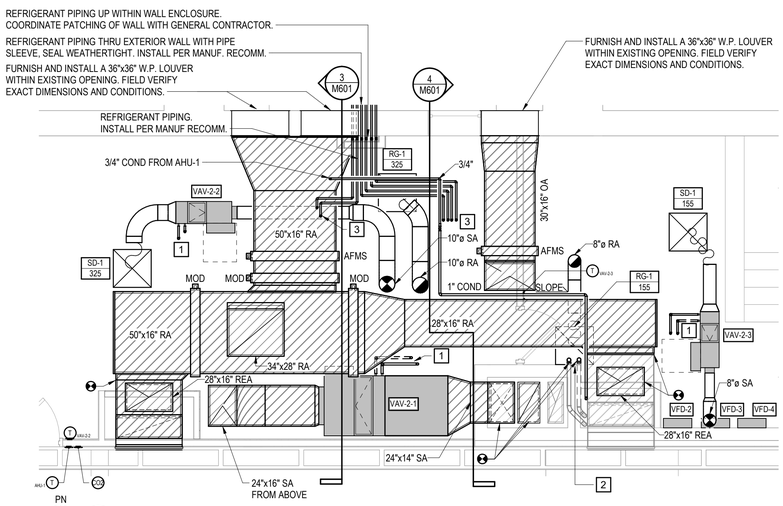


## ENLARGED FIRST FLOOR MECHANICAL PLAN

1 M601

SCALE: 1/4" = 1'-0"

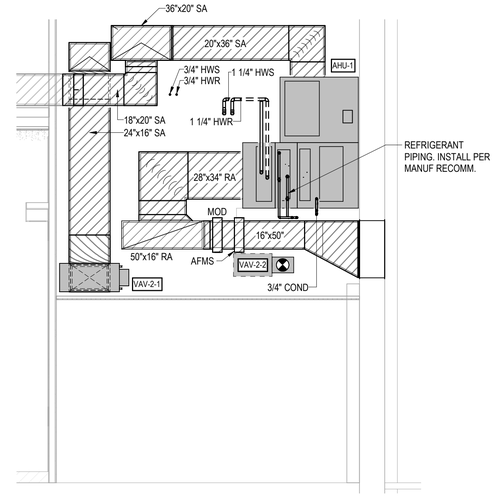


## AHU-1 SECTION

3 M601

SCALE: 1/4" = 1'-0"

## # SPECIFIC PLAN NOTES

1 3/4" HWS FROM ABOVE. 3/4" HWR UP.

2 1" HWS UP. 1" HWR DN.

3 REFRIGERANT PIPING DN FROM ABOVE.

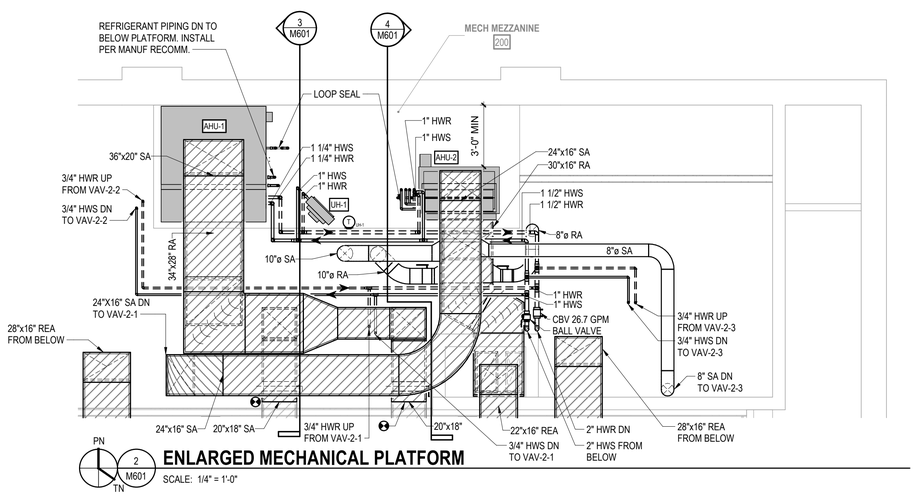


## ENLARGED MECHANICAL PLATFORM

2 M601

SCALE: 1/4" = 1'-0"

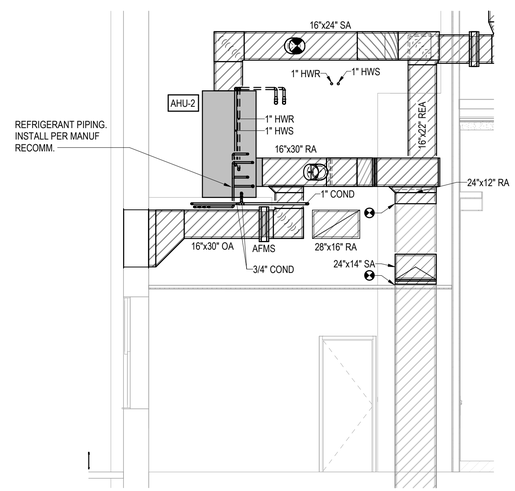


## AHU-2 SECTION

4 M601

SCALE: 1/4" = 1'-0"

STRANG

ARCHITECTURE
ENGINEERING
INTERIOR DESIGN

MADISON, WI | WAUKESHA, WI



REVISIONS

| NO. | DESCRIPTION | DATE |
|---|---|---|

CITY OF MEQUON CITY HALL HVAC AND CHAMBERS UPGRADE

11333 N CEDARBURG ROAD
MEQUON, WI 53092

DATE: 04/05/2024
DRAWING SET CD SET
STRANG PROJECT NO. 2024024

ENLARGED MECHANICAL PLANS

M601

4/5/2024 8:48:39 AM

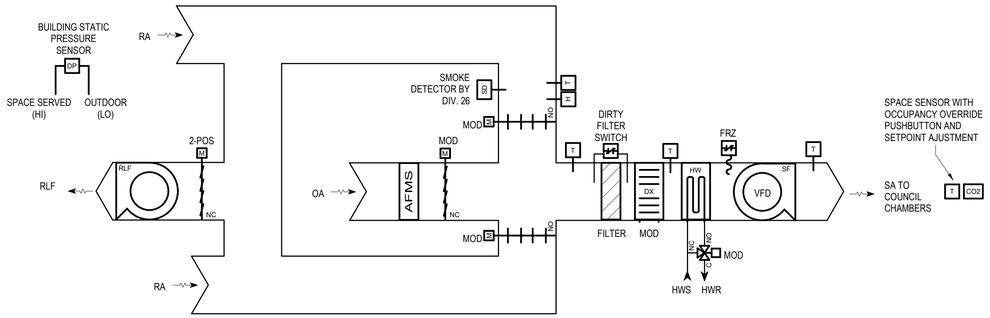


## 1 M801 AHU-1 (COUNCIL CHAMBERS) HVAC CONTROLS SCHEMATIC

SCALE: NTS

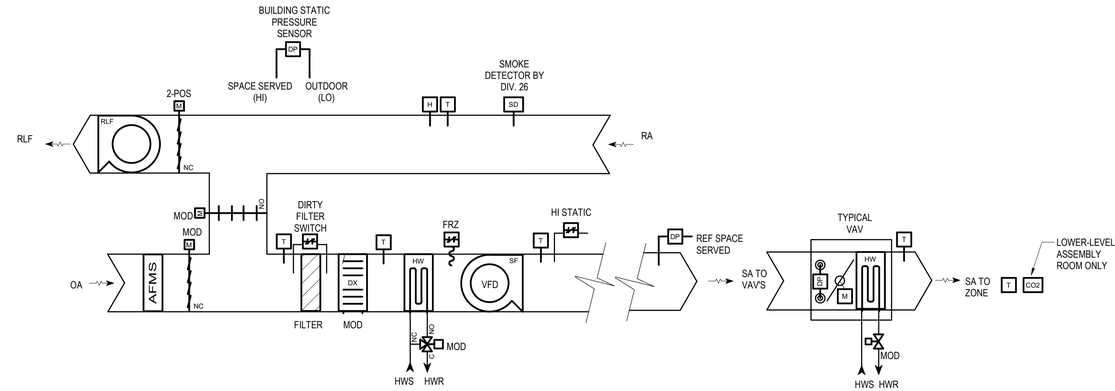


## 2 M801 AHU-2 HVAC CONTROLS SCHEMATIC

SCALE: NTS

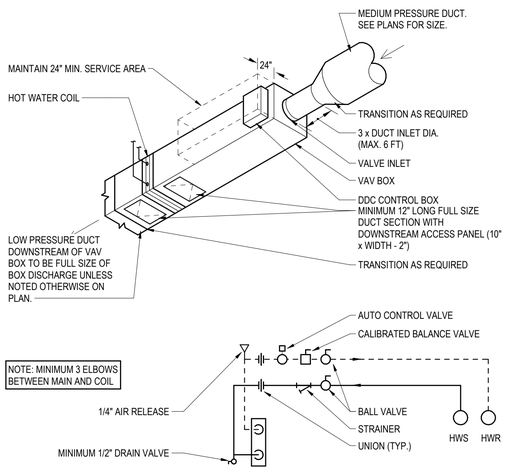


## 3 M801 VAV WITH HOT WATER REHEAT INSTALLATION

SCALE: NTS

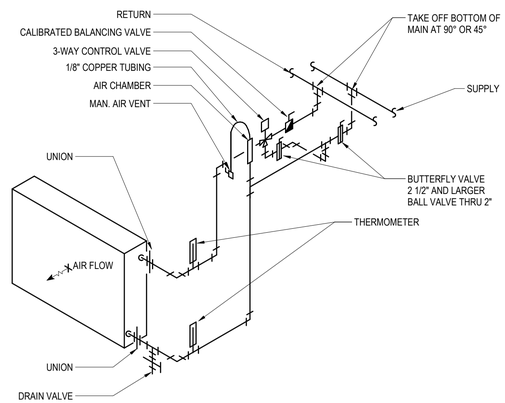


## 4 M801 AHU HOT WATER COIL

SCALE: NTS

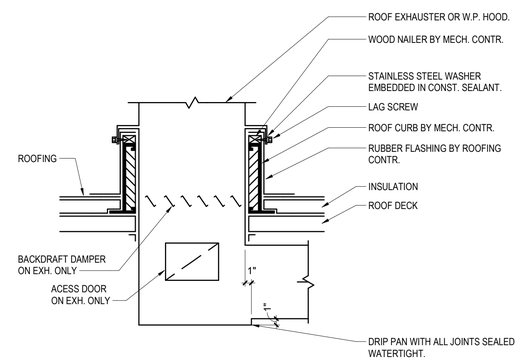


## 5 M801 CONDENSATE DRIP PAN

SCALE: NTS

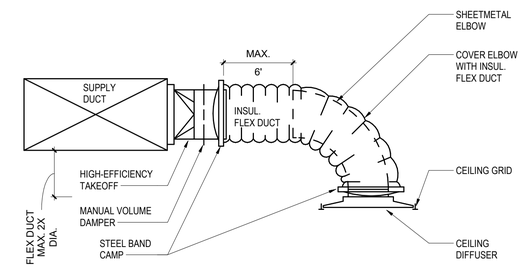


## 6 M801 DIFFUSER DETAIL

SCALE: NTS

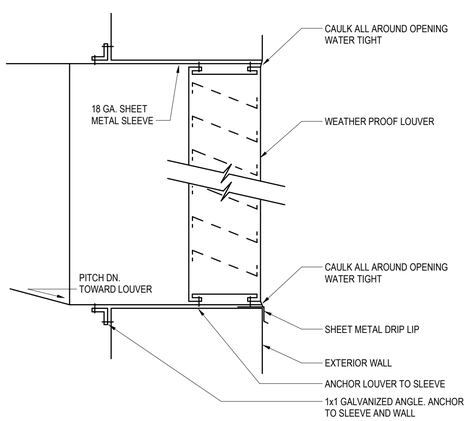


## 7 M801 WEATHERPROOF LOUVER

SCALE: NTS

STRANG

ARCHITECTURE
ENGINEERING
INTERIOR DESIGN

MADISON, WI | WAUKESHA, WI



REVISIONS

| NO. | DESCRIPTION | DATE |
|---|---|---|

CITY OF MEQUON CITY HALL HVAC AND CHAMBERS UPGRADE

11333 N CEDARBURG ROAD
MEQUON, WI 53092

DATE: 04/05/2024
DRAWING SET CD SET
STRANG PROJECT NO. 2024024

MECHANICAL DETAILS

M801

4/5/2024 8:48:40 AM

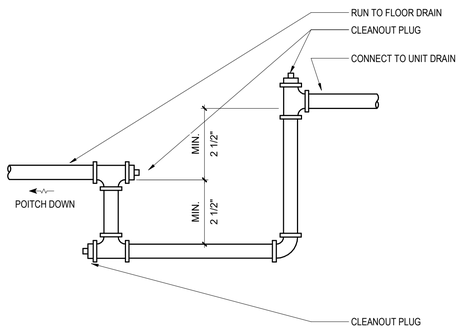


## 1 M802 LOOP SEAL

SCALE: NTS

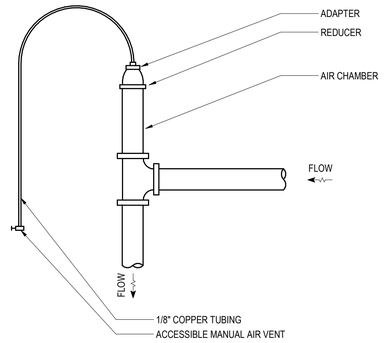


## 2 M802 AIR VENT

SCALE: NTS

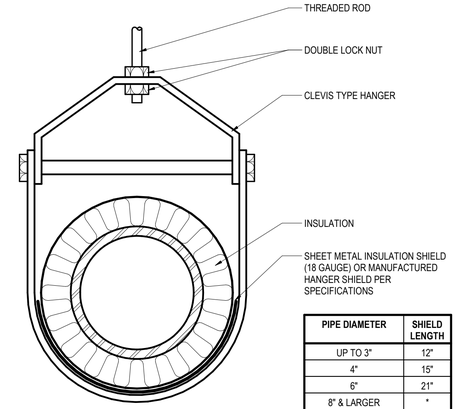


| PIPE DIAMETER | SHIELD LENGTH |
|---|---|
| UP TO 3" | 12" |
| 4" | 15" |
| 6" | 21" |
| 8" & LARGER | * |

* = INCOMPRESSIBLE INSULATING BLOCK AT HANGER WITH 24" SHIELD.

## 3 M802 INSULATED PIPE SUPPORT

SCALE: 1 1/2" = 1'-0"

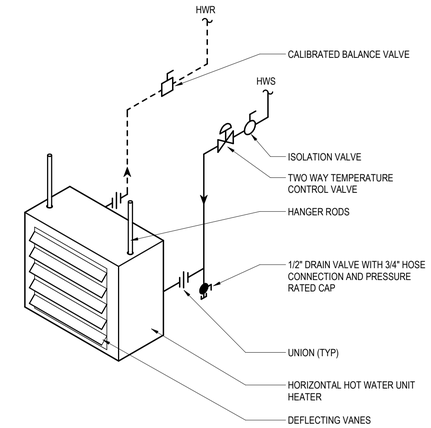


## 4 M802 HORIZONTAL HOT WATER UNIT HEATER DETAIL

SCALE: NTS

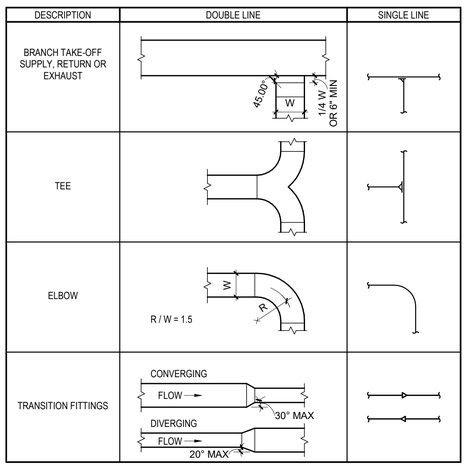


## 5 M802 DUCT FITTINGS

SCALE: NTS

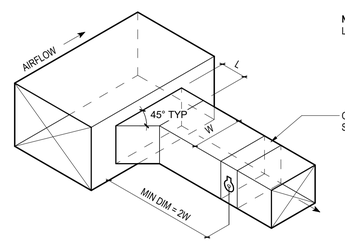


**NOTE:**
L = 1/4W (4" MIN)

OPPOSED BLADE DAMPER AS PER SPECIFICATIONS

## 6 M802 BRANCH DUCT TAKE-OFF AND DAMPER

SCALE: NTS

STRANG

ARCHITECTURE
ENGINEERING
INTERIOR DESIGN

MADISON, WI | WAUKESHA, WI



REVISIONS

| NO. | DESCRIPTION | DATE |
|---|---|---|

CITY OF MEQUON CITY HALL HVAC AND CHAMBERS UPGRADE

11333 N CEDARBURG ROAD
MEQUON, WI 53092

DATE: 04/05/2024
DRAWING SET CD SET
STRANG PROJECT NO. 2024024

MECHANICAL DETAILS

M802

4/5/2024 8:48:40 AM

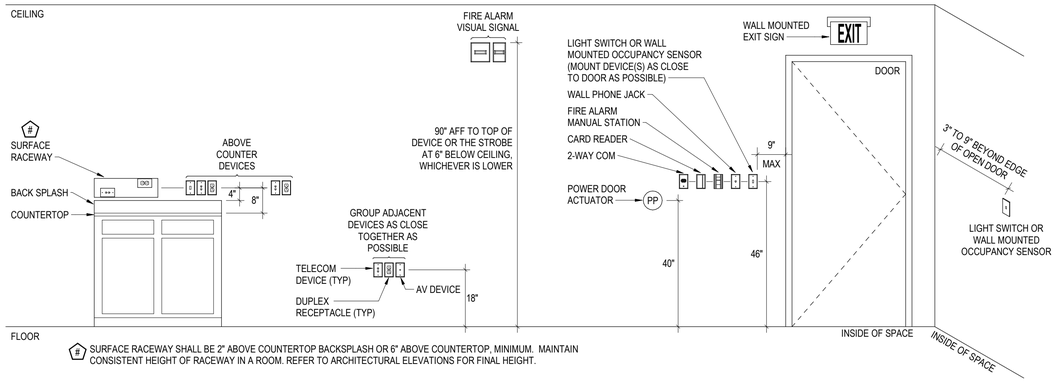


# SURFACE RACEWAY SHALL BE 2" ABOVE COUNTERTOP BACKSPLASH OR 6" ABOVE COUNTERTOP, MINIMUM. MAINTAIN CONSISTENT HEIGHT OF RACEWAY IN A ROOM. REFER TO ARCHITECTURAL ELEVATIONS FOR FINAL HEIGHT.

## 1 / E001 TYPICAL MOUNTING HEIGHT DETAIL (UNO)

SCALE: 1/2" = 1'-0"

## AUDIO/VISUAL DEVICE SYMBOLS

| | |
|---|---|
| SC | 70V BOSE FREESPACE FS4CE SPEAKER, CEILING MOUNTED |
| SP | 70V BOSE FREESPACE FS2P SPEAKER, PENDANT MOUNTED |
| PA | PA SOUND SYSTEM HEAD END RACK |

## LOW VOLTAGE LIGHTING CONTROL DEVICE SYMBOLS

| | |
|---|---|
| LV# | DEVICE CONFIGURATION NOTATION (TYP). REFER TO LIGHTING DETAILS FOR ALL SEQUENCES OF OPERATIONS AND ADDITIONAL REQUIREMENTS. |
| $ LV# | LIGHTING CONTROL BUTTON STATION. REFER TO LIGHTING DETAILS FOR REQUIREMENTS. |
| OS | WALL OCCUPANCY SENSOR. INFRARED LARGE MOTION. |
| L1 | CEILING OCCUPANCY SENSOR. DUAL TECHNOLOGY SMALL MOTION. |
| L2 | CEILING OCCUPANCY SENSOR. DUAL TECHNOLOGY LARGE MOTION. |

## RECEPTACLE DEVICE SYMBOLS

| | |
|---|---|
| | DUPLEX RECEPTACLE NEMA 5-20R, UNO<br>STBY-STANDBY POWER, UPS-UPS POWER, CTRL-CONTROLLED<br>ABOVE COUNTER |
| | SIMPLEX RECEPTACLE NEMA 5-20R, UNO<br>STBY-STANDBY POWER, UPS-UPS POWER, CTRL-CONTROLLED<br>ABOVE COUNTER |
| | DUPLEX RECEPTACLE NEMA 5-20R, UNO<br>STBY-STANDBY POWER, UPS-UPS POWER, CTRL-CONTROLLED<br>ABOVE COUNTER |

## POWER DISTRIBUTION SYMBOLS

| | |
|---|---|
| | MOTOR OR ELECTRICAL CONNECTION TO EQUIPMENT.<br>SEE ELECTRICAL CONNECTION SCHEDULE (UNO) |
| PNL XXX | PANELBOARD |
| | ELECTRICAL CONNECTION. SEE SCHEDULE (UNO)<br>SHADING INDICATES EMERGERNCY |
| | NON-FUSED SAFETY DISCONNECT SWITCH |
| | FUSED SAFETY DISCONNECT SWITCH |
| | COMBINATION STARTER/DISCONNECT SWITCH |
| VFD | COMBINATION VARIABLE FREQUENCY DRIVE/DISCONNECT SWITCH |
| T | TRANSFORMER - SEE SCHEDULE (UNO) |
| ELCU | EMERGENCY LIGHTING CONTROL UNIT |

## FIRE ALARM DEVICE SYMBOLS

| | |
|---|---|
| FACP | FIRE ALARM CONTROL PANEL |
| CM | FIRE ALARM CONTROL MODULE |

## LINETYPE EXPLANATION

| | |
|---|---|
| | SOLID DEVICES, LUMINAIRES, AND EQUIPMENT SHOWN WITH A HALF-TONE LINETYPE ARE EXISTING AND SHALL REMAIN IN PLACE. |
| | DASHED DEVICES, LUMINAIRES, AND EQUIPMENT ARE TO BE DEMOLISHED AS PART OF THIS WORK. |
| | SOLID DEVICES, LUMINAIRES, AND EQUIPMENT SHOWN WITH A DARK LINETYPE ARE NEW AND ARE BEING INSTALLED AS PART OF THIS WORK. |

## ELECTRICAL ABBREVIATIONS

| | | | |
|---|---|---|---|
| ACT | ACOUSTICAL CEILING TILE | MC | MECHANICAL/HVAC CONTRACTOR |
| AFF | ABOVE FINISH FLOOR | MCB | MAIN CIRCUIT BREAKER |
| AFG | ABOVE FINAL GRADE | MCC | MOTOR CONTROL CENTER |
| AIC | AMPERE INTERRUPTING CAPACITY | MEGB | MAIN EQUIPMENT GROUNDING BUS |
| ALT | ALTERNATE | MIN | MINIMUM |
| APPROX | APPROXIMATELY | MISC | MISCELLANEOUS |
| AMP | AMPERE | MLO | MAIN LUG ONLY |
| ARCH | ARCHITECT, ARCHITECTURAL | MMS | MANUAL MOTOR STARTER |
| ATS | AUTOMATIC TRANSFER SWITCH | MFR | MANUFACTURER |
| AUX | AUXILIARY | MTR | MOTOR |
| AV | AUDIO VISUAL | MTS | MANUAL TRANSFER SWITCH |
| AWG | AMERICAN WIRE GAUGE | MW | MICROWAVE |
| BFG | BELOW FINAL GRADE | N.C. | NORMALLY CLOSED |
| BLDG | BUILDING | NEC | NATIONAL ELECTRICAL CODE |
| BSC | BIOSAFETY CABINET | NEMA | NATIONAL ELECTRICAL MFR ASSOC. |
| | | NFSS | NON-FUSED SAFETY SWITCH |
| C | CONDUIT | NIC | NOT IN CONTRACT |
| CB | CIRCUIT BREAKER | NL | NIGHTLIGHT |
| CCTV | CLOSED CIRCUIT TELEVISION | N.O. | NORMALLY OPEN |
| CFCI | CONTR FURNISHED, CONTR INSTALLED | NTS | NOT TO SCALE |
| | | NU | NEAR UNIT |
| CKT | CIRCUIT | | |
| CLG | CEILING | OFCI | OWNER FURNISHED, CONTR INSTALLED |
| CONT | CONTINUOUS, CONTINUATION | | |
| CONTR | CONTRACTOR | OFOI | OWNER FURNISHED, OWNER INSTALLED |
| CT | CABLE TRAY | | |
| CTP | CLEAN TECHNICAL POWER | OU | ON UNIT |
| CTR | CENTER | | |
| CU | COPPER | P | POLE |
| | | PBC | PLUMBING CONTRACTOR |
| DAS | DISTRIBUTED ANTENNA SYSTEM | PDO | POWER DOOR OPERATOR |
| DED | DEDICATED | PH | PHASE |
| DISC | DISCONNECT | PNL | PANEL |
| DIST | DISTRIBUTION | PP | POWER POLE |
| DIV | DIVISION | PRI | PRIMARY |
| DWG | DRAWING | PRV | POWER ROOF VENTILATOR |
| | | PVC | POLYVINYL CHLORIDE |
| EBU | EMERGENCY BATTERY UNIT | | |
| EC | ELECTRICAL CONTRACTOR | SCCR | SHORT CIRCUIT CURRENT RATING |
| EGB | EQUIPMENT GROUND BUS | SHT | SHEET |
| ELCU | EMERGENCY LIGHTING CONTROL UNIT | SPEC | SPECIFICATION |
| | | SPKR | SPEAKER |
| ELEC | ELECTRICAL | SP | SPARE |
| ELEV | ELEVATOR | SPD | SURGE PROTECTIVE DEVICE |
| EM | EMERGENCY | STD | STANDARD |
| EMT | ELECTRICAL METAL TUBING | SUSP | SUSPENDED |
| EQUIP | EQUIPMENT | SW | SWITCH |
| ER | ELEVATOR RECALL | SWBD | SWITCHBOARD |
| ETR | EXISTING TO REMAIN | SWGR | SWITCHGEAR |
| EWC | ELECTRIC WATER COOLER | SYM | SYMMETRICAL |
| | | SYS | SYSTEM |
| F | FUSE | | |
| FA | FIRE ALARM | TR | TAMPER RESISTANT |
| FB | FLOOR BOX | TCP | TEMPERATURE CONTROL PANEL |
| FL | FLOOR | TEL | TELEPHONE |
| FPC | FIRE PROTECTION CONTRACTOR | XFMR | TRANSFORMER |
| | | TV | TELEVISION |
| GC | GENERAL CONTRACTOR | TYP | TYPICAL |
| GD | GARBAGE DISPOSAL | | |
| GFCI | GROUND FAULT CKT INTERRUPTER | UG | UNDERGROUND |
| GND | GROUND | UH | UNIT HEATER |
| GYP | GYPSUM | UNO | UNLESS NOTED OTHERWISE |
| HOA | HAND-OFF-AUTOMATIC SWITCH | V | VOLT |
| HORIZ | HORIZONTAL | VA | VOLT AMPERE |
| HP | HORSEPOWER | VDP | VIDEO DISPLAY PANEL |
| HT | HEIGHT | VERT | VERTICAL |
| | | VFD | VARIABLE FREQUENCY DRIVE |
| IG | ISOLATED GROUND | VSD | VARIABLE SPEED DRIVE |
| IT | INFORMATION TECHNOLOGY | | |
| | | W | WATT |
| JB | JUNCTION BOX | W/ | WITH |
| | | WC | WATER CLOSET |
| KV | KILOVOLT | W/O | WITHOUT |
| KVA | KILOVOLT-AMPERE | WP | WET LOCATION/WEATHERPROOF |
| KW | KILOWATT | | |
| KWH | KILOWATT HOUR | XP | EXPLOSION PROOF |
| LTS | LIGHTS | | |
| LV | LOW VOLTAGE | | |

## GENERAL ELECTRICAL NOTES

1. MOUNT EQUIPMENT AT NOMINAL MOUNTING HEIGHT INDICATED ON THE DRAWINGS OR DETAILED ON ARCHITECTURAL ELEVATIONS.
2. INSTALL INSULATED GREEN GROUND CONDUCTOR WITH ALL BRANCH CIRCUIT AND FEEDER CONDUCTORS, SIZE PER NEC TABLE 250.122.
3. ELECTRICAL CONTRACTOR SHALL PROVIDE SLEEVED OPENING WHERE REQUIRED TO RUN CONDUITS AND CABLE SYSTEMS THROUGH SLABS, WALLS, CEILINGS, AND BRIDGING, EXCEPT WHERE OTHERWISE NOTED. SEE ARCHITECTURAL DRAWINGS FOR WALL TYPE AND SPEC SECTION 07 84 00 FOR SPECIFIC FIRE STOP METHODS.
4. CONTRACTOR SHALL REFER TO ELECTRICAL SPECIFICATIONS FOR MATERIAL AND EXECUTION OF WORK.
5. CONTRACTOR SHALL VERIFY ALL SIZES AND LOCATIONS OF ALL EXISTING SERVICES AFFECTED BY THIS PROJECT.
6. ALL HOME RUNS SHALL BE MINIMUM 3/4" EMT.
7. THE CONTRACTOR SHALL REFER TO DRAWINGS AND SPECIFICATIONS OF OTHER SECTIONS FOR ADDITIONAL/RELATED ELECTRICAL REQUIREMENTS AS LISTED IN THE RESPECTIVE DIVISIONS.
8. ALL WORK SHOWN IS DIAGRAMMATIC IN NATURE AND INTENDED TO ILLUSTRATE GENERAL INTENT ONLY. ELECTRICAL CONTRACTOR SHALL PROVIDE ALL ADDITIONAL LABOR, MATERIALS, ACCESSORIES, EQUIPMENT, ETC. REQUIRED TO CREATE A FULLY FUNCTIONAL SYSTEM IN ACCORDANCE WITH THESE DRAWINGS, APPLICABLE CODES, AND INDUSTRY STANDARDS.
9. ELECTRICAL CONTRACTOR SHALL FULLY COORDINATE WITH ALL OTHER CONTRACTORS TO ENSURE CONFLICTS DO NOT ARISE. ALL COORDINATION CONFLICTS BETWEEN CONTRACTORS SHALL BE RESOLVED IN A MANNER THAT IS ACCEPTABLE TO OWNER, ARCHITECT, AND ENGINEER, AT NO COST TO THE PROJECT.
10. ALL ELECTRICAL CONNECTIONS TO OTHER CONTRACTORS' EQUIPMENT SHALL BE FULLY COORDINATED WITH THE PROVIDING CONTRACTOR PRIOR TO ROUGH-IN. ELECTRICAL CONTRACTOR SHALL PROVIDE ALL ADJUSTMENTS NEEDED TO PROVIDE POWER TO EQUIPMENT. ANY ADJUSTMENTS REQUIRED SHALL BE AT NO COST TO THE PROJECT.


STRANG
ARCHITECTURE
ENGINEERING
INTERIOR DESIGN
MADISON, WI | WAUKESHA, WI




REVISIONS

| NO. | DESCRIPTION | DATE |
|---|---|---|

CITY OF MEQUON CITY HALL HVAC AND CHAMBERS UPGRADE
11333 N CEDARBURG ROAD
MEQUON, WI 53092

DATE: 04/05/2024
DRAWING SET CD SET
STRANG PROJECT NO. 2024024

ELECTRICAL SYMBOLS, ABBREVIATIONS AND GENERAL NOTES

E001

4/4/2024 6:29:19 PM

## # SPECIFIC DEMOLITION NOTES

1 DISCONNECT EQUIPMENT AND REMOVE CONDUIT AND WIRE BACK TO DISCONNECT.

2 DISCONNECT EXISTING CEILING FAN. SALVAGE EXISTING CIRCUIT FOR NEW FANS.

3 DEMOLISH DISCONNECTS AND REMOVE WIRE TROUGH. SALVAGE FEEDER. SEE SHEET E201 FOR NEW.

4 DISCONNECT AND REMOVE EXISTING SPEAKER.

5 DEMOLISH DISCONNECTS AND REMOVE ALL CONDUIT AND WIRE BACK TO SOURCE PANEL. MARK BREAKER AS SPARE.

6 EXISTING PA HEAD END UNIT TO REMAIN.

7 REMOVE ALL SWITCHES ASSOCIATED WITH LIGHTING.

8 EXISTING BRANCH CIRCUIT TO BE REUSED FOR NEW LIGHT FIXTURES.

9 DISCONNECT AND REMOVE EXISTING LIGHT FIXTURE. REMOVE CONDUIT AND WIRE BACK TO SOURCE PANEL.

10 DISCONNECT AND REMOVE RECEPTACLE. SALVAGE EXISTING BRANCH CIRCUIT FOR REINSTALLATION.

## GENERAL DEMOLITION NOTES

1 EXISTING CONDUIT, BOXES, LUMINAIRES, CEILING SUPPORT SYSTEMS, ETC. THAT MUST BE MODIFIED OR RELOCATED FOR INSTALLATION OF NEW WORK, SYSTEMS, ETC. SHALL BE INCLUDED WITHIN THE SCOPE OF WORK OF THIS PROJECT.

2 REMOVE ALL DEMOLISHED CONDUIT, DEVICES, LUMINAIRES, ETC. INDICATED. EXISTING TO REMAIN SYSTEMS SHALL BE MAINTAINED IN SERVICE. REMOVE ALL ABANDONED HANGERS.

3 WHERE EQUIPMENT, LUMINAIRES, DEVICES, ETC. ARE INDICATED TO BE REMOVED, DISCONNECT AND REMOVE THE BRANCH CIRCUIT BACK TO THE NEXT JUNCTION POINT. ALL ABANDONED BRANCH CIRCUITS WILL BE REMOVED BACK TO THE SOURCE.

4 REMOVE ALL DATA JACKS, CABLING AND CONDUITS ASSOCIATED WITH ALL EXISTING DEVICES SHOWN TO BE REMOVED (DASHED) BACK TO THE SOURCE LOCATION FROM EACH DEVICE, UNLESS NOTED OTHERWISE.

5 REMOVE ALL OVERHEAD SPEAKERS, CABLING, BACKBOXES, AND CONDUITS BACK SOURCE LOCATION. IF WALL VOLUME CONTROLS EXIST REMOVE THEM AS WELL.

6 EXISTING TO REMAIN ELECTRICAL SYSTEMS, INCLUDING BUT NOT LIMITED TO, POWER, LIGHTING, FIRE ALARM AND COMMUNICATIONS SHALL REMAIN IN SERVICE THROUGH OUT THE CONSTURCTION PHASING. COORDINATE REQUIREMENTS WITH OWNER PRIOR TO COMMENCING DEMOLITION WORK.

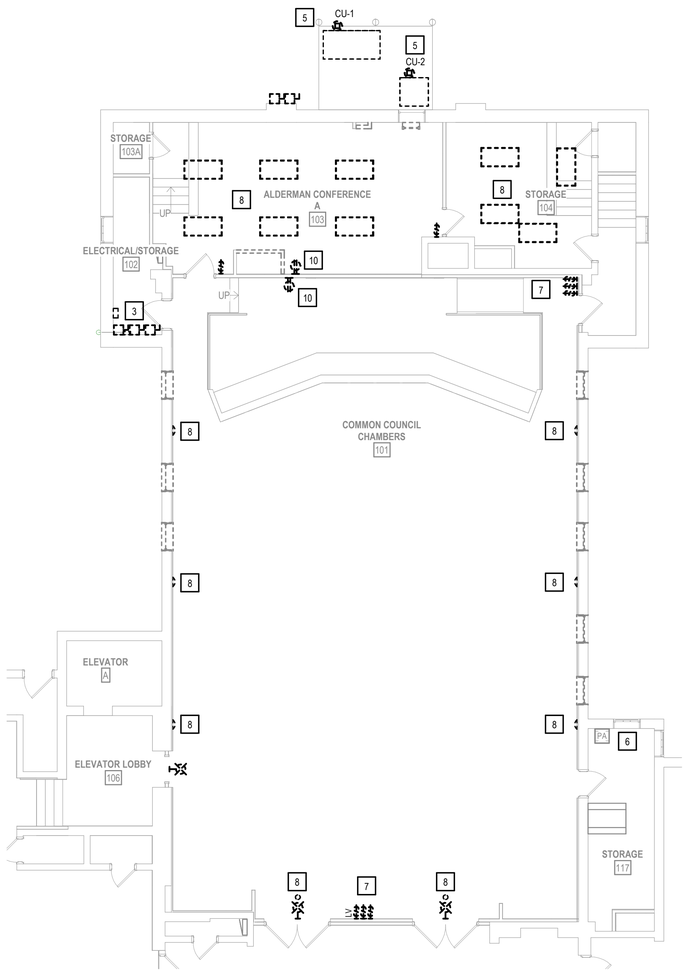


PN 1 E101 TN

### FIRST FLOOR ELECTRICAL DEMOLITION PLAN

SCALE: 1/8" = 1'-0"

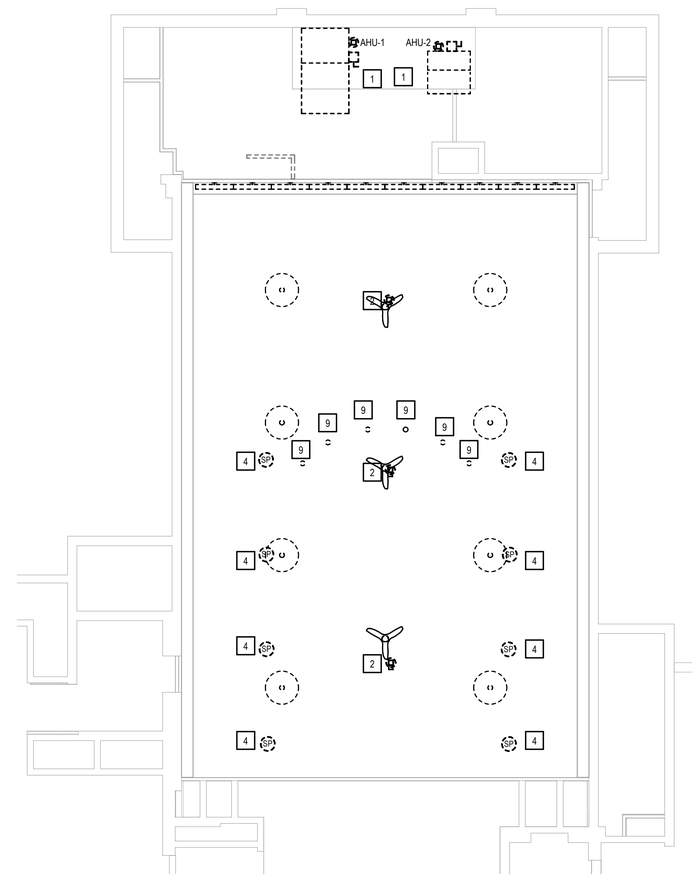


PN 2 E101 TN

### SECOND FLOOR ELECTRICAL DEMOLITION PLAN

SCALE: 1/8" = 1'-0"

STRANG

ARCHITECTURE
ENGINEERING
INTERIOR DESIGN

MADISON, WI | WAUKESHA, WI



REVISIONS

| NO. | DESCRIPTION | DATE |
|---|---|---|

CITY OF MEQUON CITY HALL HVAC AND CHAMBERS UPGRADE

11333 N CEDARBURG ROAD
MEQUON, WI 53092

DATE: 04/05/2024
DRAWING SET CD SET
STRANG PROJECT NO. 2024024

ELECTRICAL DEMOLITION PLAN

E101

4/4/2024 6:22:46 PM

## LUMINAIRE SCHEDULE NOTES

1. LUMINAIRE MOUNTING TO BE COORDINATED WITH CEILING OR WALL TYPE. ALL TRIM AND MOUNTING ACCESSORIES SHALL BE PROVIDED AND VERIFIED COMPATIBLE WITH MOUNTING SURFACE TYPE AND ARCHITECTURAL DRAWINGS.
2. FINAL MOUNTING HEIGHTS FOR SUSPENDED AND WALL LUMINAIRES SHALL BE AS NOTED AND CONFIRMED WITH ARCHITECTURAL ELEVATIONS AND DETAILS, IF APPLICABLE. IF THIS INFORMATION IS NOT SHOWN, HEIGHTS SHALL BE CONFIRMED WITH ARCHITECT/ENGINEER PRIOR TO ORDERING AND ROUGH-IN.
3. FIXTURE MANUFACTURER AND MODEL LISTED IS THE BASIS FOR DESIGN. REQUEST FOR SUBSTITUTIONS SHALL BE PROVIDED WITH DOCUMENTATION OF EQUIVALENCE, INCLUDING (BUT NOT LIMITED TO) SIZE, APPEARANCE, FINISH, DISTRIBUTION, LUMEN OUTPUT, AND PHOTOMETRIC COMPARISON CHARTS OF THE BASIS OF DESIGN AND SUBSTITUTION LUMINAIRE. PROVIDE ELECTRONIC IES FILE OF SUBSTITUTION. REFER TO SPECIFICATION FOR ADDITIONAL REQUIREMENTS
4. PART NUMBERS/SERIES LISTED ARE TO ESTABLISH A MINIMUM QUALITY LEVEL ONLY. SUPPLIERS SHALL VERIFY THE LISTED LUMINAIRE MEETS ALL REQUIREMENTS LISTED IN THIS SCHEDULE AND SPECIFICATIONS. WHERE THE PART NUMBER LISTED DOES NOT MEET ALL THE REQUIREMENTS LISTED, SUPPLIER SHALL PROVIDE LUMINAIRE WITH EQUAL OR BETTER QUALITY THAT MEETS ALL THE REQUIREMENTS.
5. MAXIMUM LUMINAIRE POWER IS LISTED TO ENSURE COMPLIANCE WITH ENERGY CODE CALCULATIONS. EQUALS SHALL NOT USE MORE VA THAN LISTED.
6. FOR CONTINUOUS DIMMING LUMINAIRES, THE DIMMING COLUMN LISTS THE REQURED DIMMING RANGE IN PERCENTAGE. I.E. 10%-100% INDICATES A LUMINAIRE DIMMABLE FROM FULL(100%) DOWN TO 10%
8. MULTIPLE LINEAR LUMINAIRES SHOWN END TO END SHALL BE CONTINUOUSLY MOUNTED. PROVIDE LUMINAIRES THAT HAVE THE OVERALL LENGTH AS SHOWN, OR PROVIDE MANUFACTURER JOINERS, HARDWARE, AND EXTENSIONS AS REQUIRED TO JOIN MULTIPLE SECTIONS IN THE OVERALL LENGTHS AS SHOWN. PROVIDE ELECTRICAL CONNECTIONS TO MATCH THE CONTROL ZONING AND CIRCUITING OF EACH SEGMENT. PROVIDE SEPARATE POWER FEED AND CONTROL WIRING FOR EACH CHANGE IN CIRCUIT OR CONTROL ZONE ALONG CONTINUOUS LUMINAIRE.
9. BALLAST/DRIVER TYPE ABBREVIATIONS:
   LED: ELECTRONIC LED DRIVER 0-10V:0-10V DIMMING
10. LUMINAIRE OPTIONS TAG ABBREVIATIONS:
   EM: LUMINAIRE SERVED FROM INTERNAL BATTERY UNIT VIA UL924 CONTROLLER THAT ALLOWS FIXTURE TO OPERATE IN THE SAME MANNER AS NORMAL FIXTURES ON THE SAME CONTROL ZONE, AND UPON SENSING LOSS OF NORMAL POWER THE LUMEN OUTPUT AUTOMATICALLY SWITCHES TO 100%.

### LUMINAIRE SCHEDULE BASE BID

| LUMINAIRE ID | DESCRIPTION | MANUFACTURER / SERIES | LAMP TYPE / LUMENS / MIN. CRI | COLOR TEMP | DRIVER TYPE | DIMMING % | INPUT VOLT-AMPS | VOLTAGE | MOUNTING | NOTES |
|---|---|---|---|---|---|---|---|---|---|---|
| A4 | 2x4 LED VOLUMETRIC | LITHONIA BLT4 40L EZ1 LP840 | LED / 4000LM / 80 CRI | 4000 K | LED, 0-10V | 10-100% | 34 VA | 120 V | RECESSED | PRELIMINARY SELECTION. |
| B4 | LED LAY-IN FLAT PANEL | DAY-BRITE CFI 1FPZ 38L 840 4 DS UNV DIM | LED / 3800LM / 80 CRI | 4000 K | LED, 0-10V | 10-100% | 30 VA | 120 V | RECESSED | |
| D6 | 6" RECESSED LED FLANGELESS DOWNLIGHT | GOTHAM EVO6 40 15 WR FL LSS MD MVOLT EZ1 | LED / 1500LM / 80 CRI | 4000 K | LED, 0-10V | 10-100% | 15 VA | 120 V | RECESSED | PROVIDE POLYMER MUD RING |
| P1 | DECORATIVE ARCHITECTUAL PENDANT | SPI STOCKHOLM AIP8429 L229W 4000K HP01 DF_STM | LED / 22600 LM / 80 CRI | 4000 K | LED, 0-10V | 10-100% | 229 VA | 120 V | PENDANT | |
| W1 | LED WALL SCONCE FIXTURE | SPI LIGHTING YORK AEW10500 L29W 4000K EMR PT51 | LED / 1700LM / 80 CRI | 4000 K | LED, 0-10V | 10-100% | 29 VA | 120 V | WALL | PROVIDE CONSTANT POWER BATTERY BACK-UP WITH 90 MINUTES OF EMERGENCY OPERATION. PROVIDE REMOTE BATTERY TEST KIT. |
| X1S | SURFACE SINGLE FACE EDGE-LIT EXIT SIGN, CLEAR ACRYLIC LENS, ALUMINUM FINISH TRIM | LITHONIA EDG 1 RMR EL SD | LED | 0 K | LED | -- | 5 VA | 120 V | SURFACE | |

## LIGHTING CONTROL SEQUENCE OF OPERATIONS

THE FOLLOWING SEQUENCE OF OPERATIONS SHALL BE UTILIZED FOR THE AREAS INDICATED. WHERE PARTICULAR AREAS ARE NOT LISTED, CONTACT THE ENGINEER PRIOR TO PROGRAMMING. THESE ARE FOR INITIAL SETUP AND SHALL BE CONFIRMED AND MODIFIED AS DIRECTED BY THE OWNER. THE FOLLOWING SEQUENCES OF OPERATION ARE BASED ON PROJECT REQUIREMENTS AND IECC 2015.

SYSTEM PROGRAMMING DETAILS (SCENES, TIME EVENTS, SENSOR BINDING, ETC.) SHALL BE PROGRAMMED BASED ON THE SEQUENCE OF OPERATION BELOW:

1. COMMON AREA
   - A. AUTOMATIC CONTROL VIA OCCUPANCY SENSORS:
     - a. UPON SENSING MOTION, ILLUMINATE THE LIGHTING TO OCCUPIED BRIGHT LEVEL OF 50% OF FULL OUTPUT.
     - b. AFTER 20 MINUTES OF NO OCCUPANCY, SENSORS SHALL FADE LIGHTING LEVEL TO 20% OF FULL OUTPUT. IF OCCUPANCY IS SENSED DURING THIS PERIOD LIGHTS WILL ILLUMINATE BACK TO FULL OUTPUT.
     - c. AFTER 30 MINUTES OF NO OCCUPANCY, SENSORS SHALL EXTINGUISH LIGHTING.
   - B. MANUAL CONTROL VIA WALL STATION
     - a. LCD TOUCH SCREEN WITH PRE-PROGRAMMED SCENES AND INDIVIDUAL ZONE CONTROL. COORDINATE SCENCES WITH OWNER FOR DURING PROGRAMMING SESSION.
     - b. EACH ZONE SHALL HAVE AN ON/OFF AND LEVEL CONTROL.
     - c. ON/OFF BUTTON SHALL TOGGLE THE CONTROLLED ZONE BETWEEN LAST DIM LEVEL AND OFF.
     - d. USERS MAY RAISE OR LOWER LEVELS BY PRESSING ARROW BUTTONS.
   - C. LIGHTING FIXTURES DESIGNATED AS EMERGENCY SHALL BE CONTROLLED WITH THE OTHER FIXTURES IN THE ZONE. UPON THE LOSS OF NORMAL POWER, THESE FIXTURES SHALL PROVIDE 100% LIGHT OUTPUT.
   - D. PROVIDE 3 HOUR TRAINING/PROGRAMMING SESSION WITH OWNER TO SET THE INDIVIDUAL ZONE LIGHT OUTPUTS (A ONE-TIME "TUNING" OF THE LIGHTS).
2. CONFERENCE ROOM
   - A. AUTOMATIC CONTROL VIA OCCUPANCY SENSORS
     - a. UPON SENSING MOTION, ILLUMINATE THE LIGHTING TO OCCUPIED BRIGHT LEVEL OF 50% OF FULL OUTPUT.
     - b. AFTER 20 MINUTES OF NO OCCUPANCY, SENSORS SHALL FADE LIGHTING LEVEL TO 10% OF FULL OUTPUT.
     - c. AFTER 30 MINUTES OF NO OCCUPANCY, SENSORS SHALL EXTINGUISH LIGHTING.
   - B. MANUAL CONTROL VIA WALL STATION
     - a. EACH ZONE SHALL HAVE AN ON/OFF AND LEVEL CONTROL.
     - b. ON/OFF BUTTON SHALL TOGGLE BETWEEN 50% AND OFF.
     - c. USERS MAY TEMPORARILY RAISE OR LOWER LEVELS BY PRESSING ARROW BUTTONS.

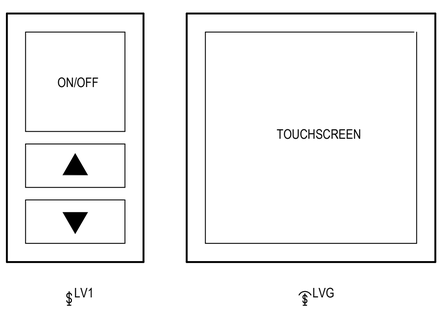


1 E201 **LIGHTING CONTROL SYSTEM BUTTON LAYOUT**
SCALE: NTS

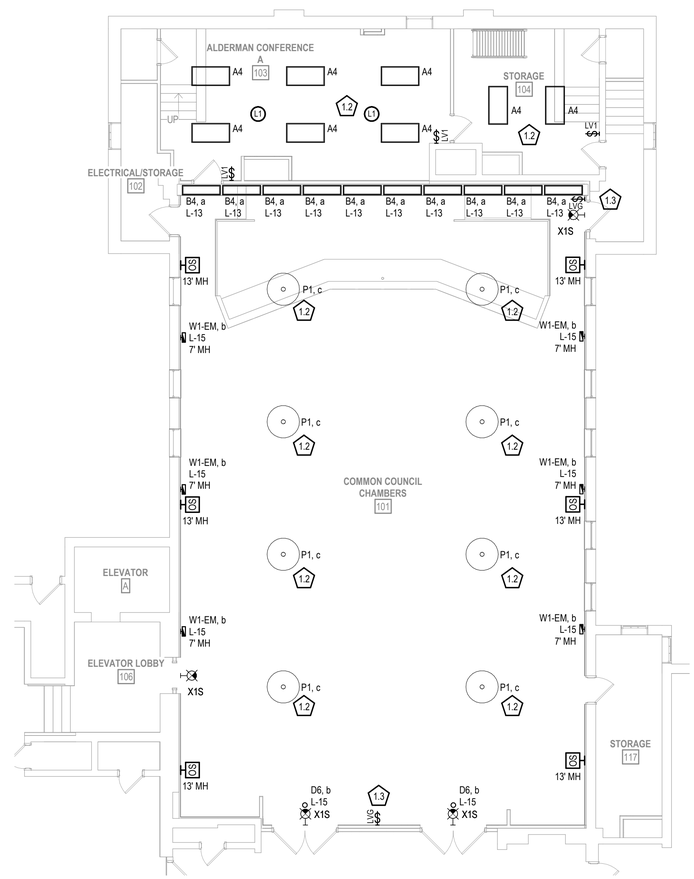


PN TN 2 E201 **FIRST FLOOR LIGHTING PLAN - BASE BID**
SCALE: 1/8" = 1'-0"

## GENERAL LIGHTING NOTES

1. REFER TO LIGHTING CONTROL SEQUENCES OF OPERATIONS FOR LIGHTING CONTROLS PROGRAMMING.
2. COORDINATE FINAL LOCATIONS OF DEVICES, LUMINAIRES, ETC WITH ARCHITECTURAL CEILING PLANS.
3. CONNECT EXIT SIGNAGE TO EMERGENCY BRANCH CIRCUIT SERVING AREA AHEAD OF CONTROLS.
4. PROVIDE OCCUPANCY/VACANCY SENSOR COVERAGE IN ALL AREAS. REFER TO SPECIFICATION SECTION 26 09 26 FOR AUXILIARY CONTACT REQUIREMENTS.

## # SPECIFIC LIGHTING NOTES

1.2 CONNECT NEW LIGHT FIXTURES TO EXISTING LIGHTING CIRCUIT SERVING AREA.

1.3 PROVIDE NEW LOW VOLTAGE TOUCH SCREEN GRAPHICS STATION. PROGRAM PER LIGHTING CONTROL SEQUENCE OF OPERATION. PATCH WALL AS REQUIRED.


STRANG
ARCHITECTURE
ENGINEERING
INTERIOR DESIGN
MADISON, WI | WAUKESHA, WI




REVISIONS

| NO. | DESCRIPTION | DATE |
|---|---|---|

CITY OF MEQUON CITY HALL HVAC AND CHAMBERS UPGRADE
11333 N CEDARBURG ROAD
MEQUON, WI 53092

DATE: 04/05/2024
DRAWING SET CD SET
STRANG PROJECT NO. 2024024

FIRST FLOOR LIGHTING PLAN - BASE BID

E201

4/4/2024 6:22:46 PM

## LUMINAIRE SCHEDULE NOTES

1. LUMINAIRE MOUNTING TO BE COORDINATED WITH CEILING OR WALL TYPE. ALL TRIM AND MOUNTING ACCESSORIES SHALL BE PROVIDED AND VERIFIED COMPATIBLE WITH MOUNTING SURFACE TYPE AND ARCHITECTURAL DRAWINGS.
2. FINAL MOUNTING HEIGHTS FOR SUSPENDED AND WALL LUMINAIRES SHALL BE AS NOTED AND CONFIRMED WITH ARCHITECTURAL ELEVATIONS AND DETAILS, IF APPLICABLE. IF THIS INFORMATION IS NOT SHOWN, HEIGHTS SHALL BE CONFIRMED WITH ARCHITECT/ENGINEER PRIOR TO ORDERING AND ROUGH-IN.
3. FIXTURE MANUFACTURER AND MODEL LISTED IS THE BASIS FOR DESIGN. REQUEST FOR SUBSTITUTIONS SHALL BE PROVIDED WITH DOCUMENTATION OF EQUIVALENCE, INCLUDING (BUT NOT LIMITED TO) SIZE, APPEARANCE, FINISH, DISTRIBUTION, LUMEN OUTPUT, AND PHOTOMETRIC COMPARISON CHARTS OF THE BASIS OF DESIGN AND SUBSTITUTION LUMINAIRE. PROVIDE ELECTRONIC IES FILE OF SUBSTITUTION. REFER TO SPECIFICATION FOR ADDITIONAL REQUIREMENTS
4. PART NUMBERS/SERIES LISTED ARE TO ESTABLISH A MINIMUM QUALITY LEVEL ONLY. SUPPLIERS SHALL VERIFY THE LISTED LUMINAIRE MEETS ALL REQUIREMENTS LISTED IN THIS SCHEDULE AND SPECIFICATIONS. WHERE THE PART NUMBER LISTED DOES NOT MEET ALL THE REQUIREMENTS LISTED, SUPPLIER SHALL PROVIDE LUMINAIRE WITH EQUAL OR BETTER QUALITY THAT MEETS ALL THE REQUIREMENTS.
5. MAXIMUM LUMINAIRE POWER IS LISTED TO ENSURE COMPLIANCE WITH ENERGY CODE CALCULATIONS. EQUALS SHALL NOT USE MORE VA THAN LISTED.
6. FOR CONTINUOUS DIMMING LUMINAIRES, THE DIMMING COLUMN LISTS THE REQUIRED DIMMING RANGE IN PERCENTAGE. I.E. 10%-100% INDICATES A LUMINAIRE DIMMABLE FROM FULL(100%) DOWN TO 10%
8. MULTIPLE LINEAR LUMINAIRES SHOWN END TO END SHALL BE CONTINUOUSLY MOUNTED. PROVIDE LUMINAIRES THAT HAVE THE OVERALL LENGTH AS SHOWN, OR PROVIDE MANUFACTURER JOINERS, HARDWARE, AND EXTENSIONS AS REQUIRED TO JOIN MULTIPLE SECTIONS IN THE OVERALL LENGTHS AS SHOWN. PROVIDE ELECTRICAL CONNECTIONS TO MATCH THE CONTROL ZONING AND CIRCUITING OF EACH SEGMENT. PROVIDE SEPARATE POWER FEED AND CONTROL WIRING FOR EACH CHANGE IN CIRCUIT OR CONTROL ZONE ALONG CONTINUOUS LUMINAIRE.
9. BALLAST/DRIVER TYPE ABBREVIATIONS:
   LED: ELECTRONIC LED DRIVER 0-10V:0-10V DIMMING
10. LUMINAIRE OPTIONS TAG ABBREVIATIONS:
   EM: LUMINAIRE SERVED FROM INTERNAL BATTERY UNIT VIA UL924 CONTROLLER THAT ALLOWS FIXTURE TO OPERATE IN THE SAME MANNER AS NORMAL FIXTURES ON THE SAME CONTROL ZONE, AND UPON SENSING LOSS OF NORMAL POWER THE LUMEN OUTPUT AUTOMATICALLY SWITCHES TO 100%.

### LUMINAIRE SCHEDULE ALTERNATE 1

| LUMINAIRE ID | DESCRIPTION | MANUFACTURER / SERIES | LAMP TYPE / LUMENS / MIN. CRI | COLOR TEMP | DRIVER TYPE | DIMMING % | INPUT VOLT-AMPS | VOLTAGE | MOUNTING | NOTES |
|---|---|---|---|---|---|---|---|---|---|---|
| A4 | 2x4 LED VOLUMETRIC | LITHONIA BLT4 40L EZ1 LP840 | LED / 4000LM / 80 CRI | 4000 K | LED, 0-10V | 10-100% | 34 VA | 120 V | RECESSED | PRELIMINARY SELECTION. |
| B4 | LED LAY-IN FLAT PANEL | DAY-BRITE CFI 1FPZ 38L 840 4 DS UNV DIM | LED / 3800LM / 80 CRI | 4000 K | LED, 0-10V | 10-100% | 30 VA | 120 V | RECESSED | |
| D6 | 6" RECESSED LED FLANGELESS DOWNLIGHT | GOTHAM EVO6 40 15 WR FL LSS MD MVOLT EZ1 | LED / 1500LM / 80 CRI | 4000 K | LED, 0-10V | 10-100% | 15 VA | 120 V | RECESSED | PROVIDE POLYMER MUD RING |
| F4 | 4" CYLINDER DOWNLIGHT | GOTHAM EVO4CC 40/30 BR LSS MD MVOLT EZ1 JBX | LED / 3000LM / 80 CRO | 4000 K | LED, 0-10V | 10-100% | 35 VA | 120 V | SUSPENDED | |
| W1 | LED WALL SCONCE FIXTURE | SPI LIGHTING YORK AEW10500 L29W 4000K EMR PT51 | LED / 1700LM / 80 CRI | 4000 K | LED, 0-10V | 10-100% | 29 VA | 120 V | WALL | PROVIDE CONSTANT POWER BATTERY BACK-UP WITH 90 MINUTES OF EMERGENCY OPERATION. PROVIDE REMOTE BATTERY TEST KIT. |
| X1S | SURFACE SINGLE FACE EDGE-LIT EXIT SIGN, CLEAR ACRYLIC LENS, ALUMINUM FINISH TRIM | LITHONIA EDG 1 RMR EL SD | LED | 0 K | LED | -- | 5 VA | 120 V | SURFACE | |

## LIGHTING CONTROL SEQUENCE OF OPERATIONS

THE FOLLOWING SEQUENCE OF OPERATIONS SHALL BE UTILIZED FOR THE AREAS INDICATED. WHERE PARTICULAR AREAS ARE NOT LISTED, CONTACT THE ENGINEER PRIOR TO PROGRAMMING. THESE ARE FOR INITIAL SETUP AND SHALL BE CONFIRMED AND MODIFIED AS DIRECTED BY THE OWNER. THE FOLLOWING SEQUENCES OF OPERATION ARE BASED ON PROJECT REQUIREMENTS AND IECC 2015.

SYSTEM PROGRAMMING DETAILS (SCENES, TIME EVENTS, SENSOR BINDING, ETC.) SHALL BE PROGRAMMED BASED ON THE SEQUENCE OF OPERATION BELOW:

1. COMMON AREA
   - A. AUTOMATIC CONTROL VIA OCCUPANCY SENSORS:
     - a. UPON SENSING MOTION, ILLUMINATE THE LIGHTING TO OCCUPIED BRIGHT LEVEL OF 50% OF FULL OUTPUT.
     - b. AFTER 20 MINUTES OF NO OCCUPANCY, SENSORS SHALL FADE LIGHTING LEVEL TO 20% OF FULL OUTPUT. IF OCCUPANCY IS SENSED DURING THIS PERIOD LIGHTS WILL ILLUMINATE BACK TO FULL OUTPUT.
     - c. AFTER 30 MINUTES OF NO OCCUPANCY, SENSORS SHALL EXTINGUISH LIGHTING.
   - B. MANUAL CONTROL VIA WALL STATION
     - a. LCD TOUCH SCREEN WITH PRE-PROGRAMMED SCENES AND INDIVIDUAL ZONE CONTROL. COORDINATE SCENCES WITH OWNER FOR DURING PROGRAMMING SESSION.
     - b. EACH ZONE SHALL HAVE AN ON/OFF AND LEVEL CONTROL.
     - c. ON/OFF BUTTON SHALL TOGGLE THE CONTROLLED ZONE BETWEEN LAST DIM LEVEL AND OFF.
     - d. USERS MAY RAISE OR LOWER LEVELS BY PRESSING ARROW BUTTONS.
   - C. LIGHTING FIXTURES DESIGNATED AS EMERGENCY SHALL BE CONTROLLED WITH THE OTHER FIXTURES IN THE ZONE. UPON THE LOSS OF NORMAL POWER, THESE FIXTURES SHALL PROVIDE 100% LIGHT OUTPUT.
   - D. PROVIDE 3 HOUR TRAINING/PROGRAMMING SESSION WITH OWNER TO SET THE INDIVIDUAL ZONE LIGHT OUTPUTS (A ONE-TIME "TUNING" OF THE LIGHTS).
2. CONFERENCE ROOM
   - A. AUTOMATIC CONTROL VIA OCCUPANCY SENSORS
     - a. UPON SENSING MOTION, ILLUMINATE THE LIGHTING TO OCCUPIED BRIGHT LEVEL OF 50% OF FULL OUTPUT.
     - b. AFTER 20 MINUTES OF NO OCCUPANCY, SENSORS SHALL FADE LIGHTING LEVEL TO 10% OF FULL OUTPUT.
     - c. AFTER 30 MINUTES OF NO OCCUPANCY, SENSORS SHALL EXTINGUISH LIGHTING.
   - B. MANUAL CONTROL VIA WALL STATION
     - a. EACH ZONE SHALL HAVE AN ON/OFF AND LEVEL CONTROL.
     - b. ON/OFF BUTTON SHALL TOGGLE BETWEEN 50% AND OFF.
     - c. USERS MAY TEMPORARILY RAISE OR LOWER LEVELS BY PRESSING ARROW BUTTONS.

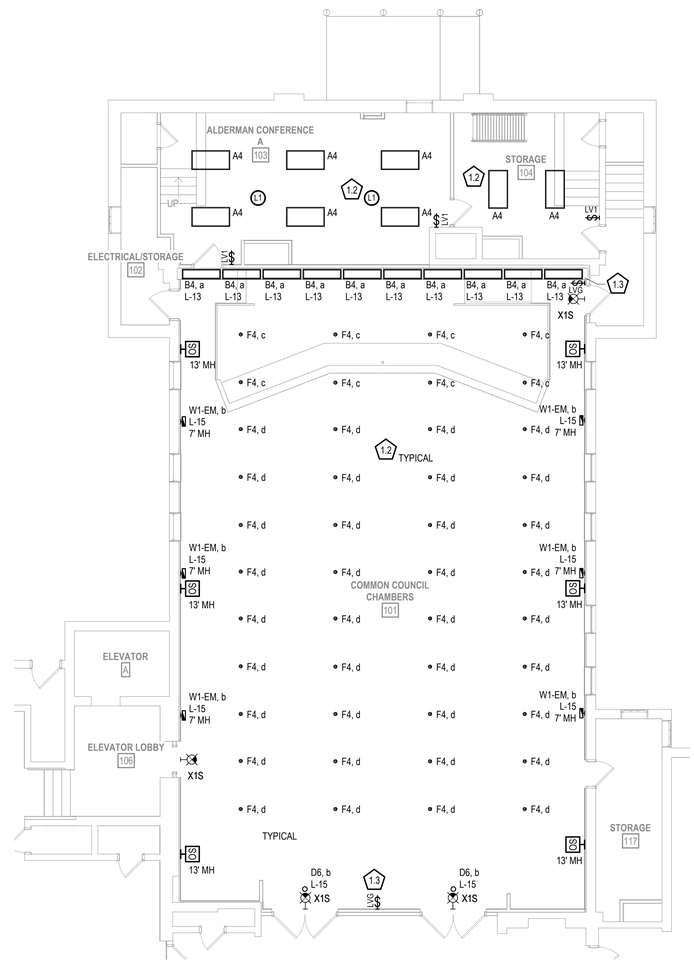


PN 1 E201A TN

## FIRST FLOOR LIGHTING PLAN - ALTERNATE 1

SCALE: 1/8" = 1'-0"

## GENERAL LIGHTING NOTES

1. REFER TO LIGHTING CONTROL SEQUENCES OF OPERATIONS FOR LIGHTING CONTROLS PROGRAMMING.
2. COORDINATE FINAL LOCATIONS OF DEVICES, LUMINAIRES, ETC WITH ARCHITECTURAL CEILING PLANS.
3. CONNECT EXIT SIGNAGE TO EMERGENCY BRANCH CIRCUIT SERVING AREA AHEAD OF CONTROLS.
4. PROVIDE OCCUPANCY/VACANCY SENSOR COVERAGE IN ALL AREAS. REFER TO SPECIFICATION SECTION 26 09 26 FOR AUXILIARY CONTACT REQUIREMENTS.

## # SPECIFIC LIGHTING NOTES

1.2 CONNECT NEW LIGHT FIXTURES TO EXISTING LIGHTING CIRCUIT SERVING AREA.

1.3 PROVIDE NEW LOW VOLTAGE TOUCH SCREEN GRAPHICS STATION. PROGRAM PER LIGHTING CONTROL SEQUENCE OF OPERATION. PATCH WALL AS REQUIRED.


STRANG
ARCHITECTURE
ENGINEERING
INTERIOR DESIGN
MADISON, WI | WAUKESHA, WI




REVISIONS

| NO. | DESCRIPTION | DATE |
|---|---|---|

CITY OF MEQUON CITY HALL HVAC AND CHAMBERS UPGRADE
11333 N CEDARBURG ROAD
MEQUON, WI 53092

DATE: 04/05/2024
DRAWING SET CD SET
STRANG PROJECT NO. 2024024

FIRST FLOOR LIGHTING PLAN - ALTERNATE 1

E201A

4/4/2024 6:22:48 PM

## LUMINAIRE SCHEDULE NOTES

1. LUMINAIRE MOUNTING TO BE COORDINATED WITH CEILING OR WALL TYPE. ALL TRIM AND MOUNTING ACCESSORIES SHALL BE PROVIDED AND VERIFIED COMPATIBLE WITH MOUNTING SURFACE TYPE AND ARCHITECTURAL DRAWINGS.
2. FINAL MOUNTING HEIGHTS FOR SUSPENDED AND WALL LUMINAIRES SHALL BE AS NOTED AND CONFIRMED WITH ARCHITECTURAL ELEVATIONS AND DETAILS, IF APPLICABLE. IF THIS INFORMATION IS NOT SHOWN, HEIGHTS SHALL BE CONFIRMED WITH ARCHITECT/ENGINEER PRIOR TO ORDERING AND ROUGH-IN.
3. FIXTURE MANUFACTURER AND MODEL LISTED IS THE BASIS FOR DESIGN. REQUEST FOR SUBSTITUTIONS SHALL BE PROVIDED WITH DOCUMENTATION OF EQUIVALENCE, INCLUDING (BUT NOT LIMITED TO) SIZE, APPEARANCE, FINISH, DISTRIBUTION, LUMEN OUTPUT, AND PHOTOMETRIC COMPARISON CHARTS OF THE BASIS OF DESIGN AND SUBSTITUTION LUMINAIRE. PROVIDE ELECTRONIC IES FILE OF SUBSTITUTION. REFER TO SPECIFICATION FOR ADDITIONAL REQUIREMENTS
4. PART NUMBERS/SERIES LISTED ARE TO ESTABLISH A MINIMUM QUALITY LEVEL ONLY. SUPPLIERS SHALL VERIFY THE LISTED LUMINAIRE MEETS ALL REQUIREMENTS LISTED IN THIS SCHEDULE AND SPECIFICATIONS. WHERE THE PART NUMBER LISTED DOES NOT MEET ALL THE REQUIREMENTS LISTED, SUPPLIER SHALL PROVIDE LUMINAIRE WITH EQUAL OR BETTER QUALITY THAT MEETS ALL THE REQUIREMENTS.
5. MAXIMUM LUMINAIRE POWER IS LISTED TO ENSURE COMPLIANCE WITH ENERGY CODE CALCULATIONS. EQUALS SHALL NOT USE MORE VA THAN LISTED.
6. FOR CONTINUOUS DIMMING LUMINAIRES, THE DIMMING COLUMN LISTS THE REQURED DIMMING RANGE IN PERCENTAGE. I.E. 10%-100% INDICATES A LUMINAIRE DIMMABLE FROM FULL(100%) DOWN TO 10%
8. MULTIPLE LINEAR LUMINAIRES SHOWN END TO END SHALL BE CONTINUOUSLY MOUNTED. PROVIDE LUMINAIRES THAT HAVE THE OVERALL LENGTH AS SHOWN, OR PROVIDE MANUFACTURER JOINERS, HARDWARE, AND EXTENSIONS AS REQUIRED TO JOIN MULTIPLE SECTIONS IN THE OVERALL LENGTHS AS SHOWN. PROVIDE ELECTRICAL CONNECTIONS TO MATCH THE CONTROL ZONING AND CIRCUITING OF EACH SEGMENT. PROVIDE SEPARATE POWER FEED AND CONTROL WIRING FOR EACH CHANGE IN CIRCUIT OR CONTROL ZONE ALONG CONTINUOUS LUMINAIRE.
9. BALLAST/DRIVER TYPE ABBREVIATIONS:
   LED: ELECTRONIC LED DRIVER 0-10V:0-10V DIMMING
10. LUMINAIRE OPTIONS TAG ABBREVIATIONS:
   EM: LUMINAIRE SERVED FROM INTERNAL BATTERY UNIT VIA UL924 CONTROLLER THAT ALLOWS FIXTURE TO OPERATE IN THE SAME MANNER AS NORMAL FIXTURES ON THE SAME CONTROL ZONE, AND UPON SENSING LOSS OF NORMAL POWER THE LUMEN OUTPUT AUTOMATICALLY SWITCHES TO 100%.

### LUMINAIRE SCHEDULE ALTERNATE 2

| LUMINAIRE ID | DESCRIPTION | MANUFACTURER / SERIES | LAMP TYPE / LUMENS / MIN. CRI | COLOR TEMP | DRIVER TYPE | DIMMING % | INPUT VOLT-AMPS | VOLTAGE | MOUNTING | NOTES |
|---|---|---|---|---|---|---|---|---|---|---|
| A4 | 2x4 LED VOLUMETRIC | LITHONIA BLT4 40L EZ1 LP840 | LED / 4000LM / 80 CRI | 4000 K | LED, 0-10V | 10-100% | 34 VA | 120 V | RECESSED | PRELIMINARY SELECTION. |
| B4 | LED LAY-IN FLAT PANEL | DAY-BRITE CFI 1FPZ 38L 840 4 DS UNV DIM | LED / 3800LM / 80 CRI | 4000 K | LED, 0-10V | 10-100% | 30 VA | 120 V | RECESSED | |
| C8 | SPI LIGHTING ECHO ROUND 3.5 LED | 4SPI LIGHTING EIW11906 L115W 4000K DF_DIM1 RUN | LED / 9800LM / 80 CRI | 4000 K | LED, 0-10V | 10-100% | 115 VA | 120 V | WALL | |
| D4 | 4" RECESSED LED DOWNLIGHT - CONCEPT 5 SMALL | GOTHAM EVO4 35 15 WR LSS MD MVOLT EZ1 | LED / 1500LM / 80 CRI | 4000 K | LED, 0-10V | 10-100% | 14 VA | 120 V | RECESSED | |
| D6 | 6" RECESSED LED FLANGELESS DOWNLIGHT | GOTHAM EVO6 40 15 WR FL LSS MD MVOLT EZ1 | LED / 1500LM / 80 CRI | 4000 K | LED, 0-10V | 10-100% | 15 VA | 120 V | RECESSED | PROVIDE POLYMER MUD RING |
| W1 | LED WALL SCONCE FIXTURE | SPI LIGHTING YORK AEW10500 L29W 4000K EMR PT51 | LED / 1700LM / 80 CRI | 4000 K | LED, 0-10V | 10-100% | 29 VA | 120 V | WALL | PROVIDE CONSTANT POWER BATTERY BACK-UP WITH 90 MINUTES OF EMERGENCY OPERATION. PROVIDE REMOTE BATTERY TEST KIT. |
| X1S | SURFACE SINGLE FACE EDGE-LIT EXIT SIGN, CLEAR ACRYLIC LENS, ALUMINUM FINISH TRIM | LITHONIA EDG 1 RMR EL SD | LED | 0 K | LED | -- | 5 VA | 120 V | SURFACE | |

## GENERAL LIGHTING NOTES

1. REFER TO LIGHTING CONTROL SEQUENCES OF OPERATIONS FOR LIGHTING CONTROLS PROGRAMMING.
2. COORDINATE FINAL LOCATIONS OF DEVICES, LUMINAIRES, ETC WITH ARCHITECTURAL CEILING PLANS.
3. CONNECT EXIT SIGNAGE TO EMERGENCY BRANCH CIRCUIT SERVING AREA AHEAD OF CONTROLS.
4. PROVIDE OCCUPANCY/VACANCY SENSOR COVERAGE IN ALL AREAS. REFER TO SPECIFICATION SECTION 26 09 26 FOR AUXILIARY CONTACT REQUIREMENTS.

## LIGHTING CONTROL SEQUENCE OF OPERATIONS

THE FOLLOWING SEQUENCE OF OPERATIONS SHALL BE UTILIZED FOR THE AREAS INDICATED. WHERE PARTICULAR AREAS ARE NOT LISTED, CONTACT THE ENGINEER PRIOR TO PROGRAMMING. THESE ARE FOR INITIAL SETUP AND SHALL BE CONFIRMED AND MODIFIED AS DIRECTED BY THE OWNER. THE FOLLOWING SEQUENCES OF OPERATION ARE BASED ON PROJECT REQUIREMENTS AND IECC 2015.

SYSTEM PROGRAMMING DETAILS (SCENES, TIME EVENTS, SENSOR BINDING, ETC.) SHALL BE PROGRAMMED BASED ON THE SEQUENCE OF OPERATION BELOW:

1. COMMON AREA
   - A. AUTOMATIC CONTROL VIA OCCUPANCY SENSORS:
     - a. UPON SENSING MOTION, ILLUMINATE THE LIGHTING TO OCCUPIED BRIGHT LEVEL OF 50% OF FULL OUTPUT.
     - b. AFTER 20 MINUTES OF NO OCCUPANCY, SENSORS SHALL FADE LIGHTING LEVEL TO 20% OF FULL OUTPUT. IF OCCUPANCY IS SENSED DURING THIS PERIOD LIGHTS WILL ILLUMINATE BACK TO FULL OUTPUT.
     - c. AFTER 30 MINUTES OF NO OCCUPANCY, SENSORS SHALL EXTINGUISH LIGHTING.
   - B. MANUAL CONTROL VIA WALL STATION
     - a. LCD TOUCH SCREEN WITH PRE-PROGRAMMED SCENES AND INDIVIDUAL ZONE CONTROL. COORDINATE SCENCES WITH OWNER FOR DURING PROGRAMMING SESSION.
     - b. EACH ZONE SHALL HAVE AN ON/OFF AND LEVEL CONTROL.
     - c. ON/OFF BUTTON SHALL TOGGLE THE CONTROLLED ZONE BETWEEN LAST DIM LEVEL AND OFF.
     - d. USERS MAY RAISE OR LOWER LEVELS BY PRESSING ARROW BUTTONS.
   - C. LIGHTING FIXTURES DESIGNATED AS EMERGENCY SHALL BE CONTROLLED WITH THE OTHER FIXTURES IN THE ZONE. UPON THE LOSS OF NORMAL POWER, THESE FIXTURES SHALL PROVIDE 100% LIGHT OUTPUT.
   - D. PROVIDE 3 HOUR TRAINING/PROGRAMMING SESSION WITH OWNER TO SET THE INDIVIDUAL ZONE LIGHT OUTPUTS (A ONE-TIME "TUNING" OF THE LIGHTS).
2. CONFERENCE ROOM
   - A. AUTOMATIC CONTROL VIA OCCUPANCY SENSORS
     - a. UPON SENSING MOTION, ILLUMINATE THE LIGHTING TO OCCUPIED BRIGHT LEVEL OF 50% OF FULL OUTPUT.
     - b. AFTER 20 MINUTES OF NO OCCUPANCY, SENSORS SHALL FADE LIGHTING LEVEL TO 10% OF FULL OUTPUT.
     - c. AFTER 30 MINUTES OF NO OCCUPANCY, SENSORS SHALL EXTINGUISH LIGHTING.
   - B. MANUAL CONTROL VIA WALL STATION
     - a. EACH ZONE SHALL HAVE AN ON/OFF AND LEVEL CONTROL.
     - b. ON/OFF BUTTON SHALL TOGGLE BETWEEN 50% AND OFF.
     - c. USERS MAY TEMPORARILY RAISE OR LOWER LEVELS BY PRESSING ARROW BUTTONS.

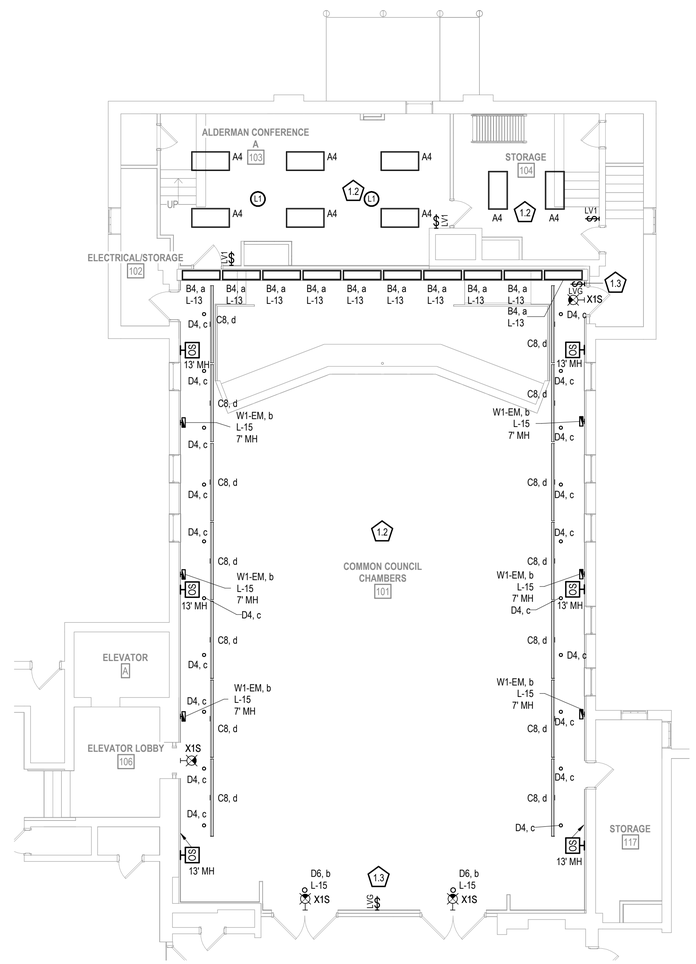


PN 1 E201B TN

## FIRST FLOOR LIGHTING PLAN - ALTERNATE 2

SCALE: 1/8" = 1'-0"

## # SPECIFIC LIGHTING NOTES

1.2 CONNECT NEW LIGHT FIXTURES TO EXISTING LIGHTING CIRCUIT SERVING AREA.

1.3 PROVIDE NEW LOW VOLTAGE TOUCH SCREEN GRAPHICS STATION. PROGRAM PER LIGHTING CONTROL SEQUENCE OF OPERATION. PATCH WALL AS REQUIRED.


STRANG
ARCHITECTURE
ENGINEERING
INTERIOR DESIGN
MADISON, WI | WAUKESHA, WI




REVISIONS

| NO. | DESCRIPTION | DATE |
|---|---|---|

CITY OF MEQUON CITY HALL HVAC AND CHAMBERS UPGRADE
11333 N CEDARBURG ROAD
MEQUON, WI 53092

DATE: 04/05/2024
DRAWING SET CD SET
STRANG PROJECT NO. 2024024

FIRST FLOOR LIGHTING PLAN - ALTERNATE 2

E201B

4/4/2024 6:22:50 PM

## SPECIFIC POWER NOTES

2.1 DISCONNECT SWITCHES FOR ACCU-1 AND ACCU-2

2.2 NEW CONDUITS FOR OUTDOOR CONDENSING UNITS TO BE BORED UNDER EXISTING CONCRETE SIDEWALK AND PENETRATES BUILDING BELOW GRADE. SIDEWALK TO REMAIN UNDISTURBED. PATCH AND REPAIR LANDSCAPE BEDS.

2.3 EXISTING 240V, 3Ø GE SPECTRA POWER SERIES DISTRIBUTION PANEL. VERIFY EXISTING BREAKER SPACES WITHIN THE PANEL AND NOTIFY ARCHITECT IF NEW BREAKERS CANNOT BE ADDED.

2.4 EXISTING SIMPLEX 4005 FIRE ALARM CONTROL PANEL.

2.5 REUSE EXISTING FEEDER FOR NEW MECH1 PANEL. UPDATE BREAKER LABEL ON MDP.

2.6 LOCATION OF ETR ELECTRICAL PANEL FEEDING LOADS IN COUNCIL CHAMBERS.

2.7 PROVIDE 120V 15A DUPLEX RECEPTACLE WITH ISOLATED GROUND.

2.8 PROVIDE 120V 20A DUPLEX RECEPTACLES WITH ISOLATED GROUND. RECEPTACLES NEED TO BE INSTALLED IN 2" RECESSED BOX. COORDINATE FINAL LOCATION WITH AV CONSUILTANT BEFORE INSTALLATION.

2.9 INSTALL NEW RECEPTACLE USING SALVAGED BRANCH CIRCUIT.

2.10 CONDUIT PATH TO ENTER BUILDING BELOW GRADE AND STUB UP IN EXISTING CLOSET TO MEZZANINE LEVEL.

## GENERAL POWER NOTES

1 CONTRACTOR SHALL LOAD BALANCE THE PANELBOARDS IN ACCORDANCE WITH THE PROJECT SPECIFICATIONS.

2 SEE MECHANICAL SHEETS FOR ADDITIONAL INFORMATION RELATED TO ELECTRICAL.

3 BRANCH CIRCUIT NUMBER SEQUENTIAL ORDER IS FOR BOOKKEEPING PURPOSES ONLY AND MAY NOT REFLECT ACTUAL CIRCUIT BREAKER NUMBER SEQUENCE IN THE PANELBOARD. NUMBERS INDICATE WHICH DEVICES ARE CONNECTED TO A COMMON BRANCH CIRCUIT.

4 REFER TO SPECIFICATION SECTION 07 84 00 PENETRATION FIRE STOPPING FOR ALL FLOOR AND WALL PENETRATIONS THROUGH RATED WALLS. REFER TO THE ARCHITECTURAL LIFE SAFETY PLAN SHEETS FOR FLOOR AND WALL RATINGS.

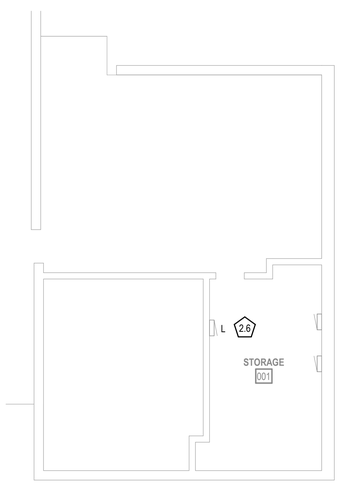


PN 1 E301 TN

### BASEMENT POWER PLAN

SCALE: 1/8" = 1'-0"

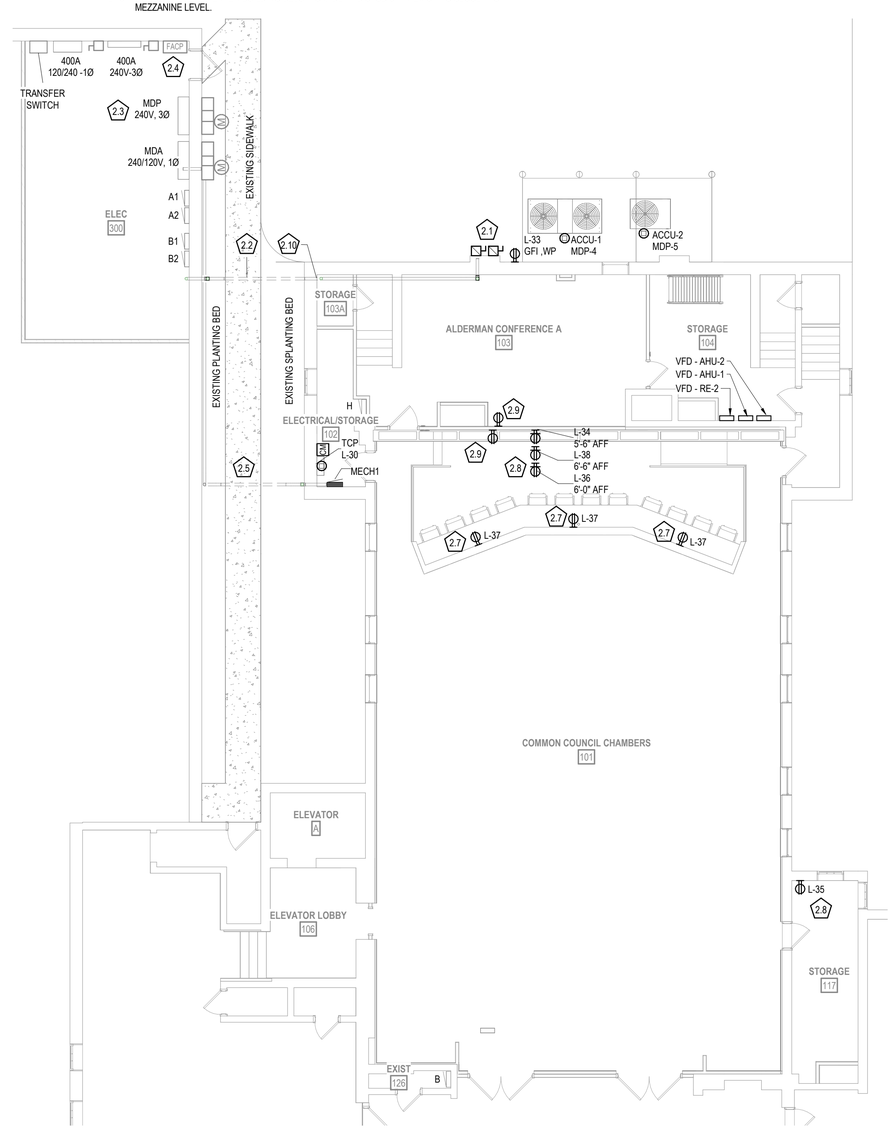


PN 2 E301 TN

### FIRST FLOOR POWER PLAN

SCALE: 1/8" = 1'-0"

STRANG

ARCHITECTURE
ENGINEERING
INTERIOR DESIGN

MADISON, WI | WAUKESHA, WI



REVISIONS

| NO. | DESCRIPTION | DATE |
|---|---|---|

CITY OF MEQUON CITY HALL HVAC AND CHAMBERS UPGRADE

11333 N CEDARBURG ROAD
MEQUON, WI 53092

DATE: 04/05/2024
DRAWING SET CD SET
STRANG PROJECT NO. 2024024

BASEMENT & FIRST FLOOR POWER PLAN

E301

4/5/2024 7:36:37 AM

## GENERAL POWER NOTES

1 CONTRACTOR SHALL LOAD BALANCE THE PANELBOARDS IN ACCORDANCE WITH THE PROJECT SPECIFICATIONS.

2 SEE MECHANICAL SHEETS FOR ADDITIONAL INFORMATION RELATED TO ELECTRICAL.

3 BRANCH CIRCUIT NUMBER SEQUENTIAL ORDER IS FOR BOOKKEEPING PURPOSES ONLY AND MAY NOT REFLECT ACTUAL CIRCUIT BREAKER NUMBER SEQUENCE IN THE PANELBOARD. NUMBERS INDICATE WHICH DEVICES ARE CONNECTED TO A COMMON BRANCH CIRCUIT.

4 REFER TO SPECIFICATION SECTION 07 84 00 PENETRATION FIRE STOPPING FOR ALL FLOOR AND WALL PENETRATIONS THROUGH RATED WALLS. REFER TO THE ARCHITECTURAL LIFE SAFETY PLAN SHEETS FOR FLOOR AND WALL RATINGS.

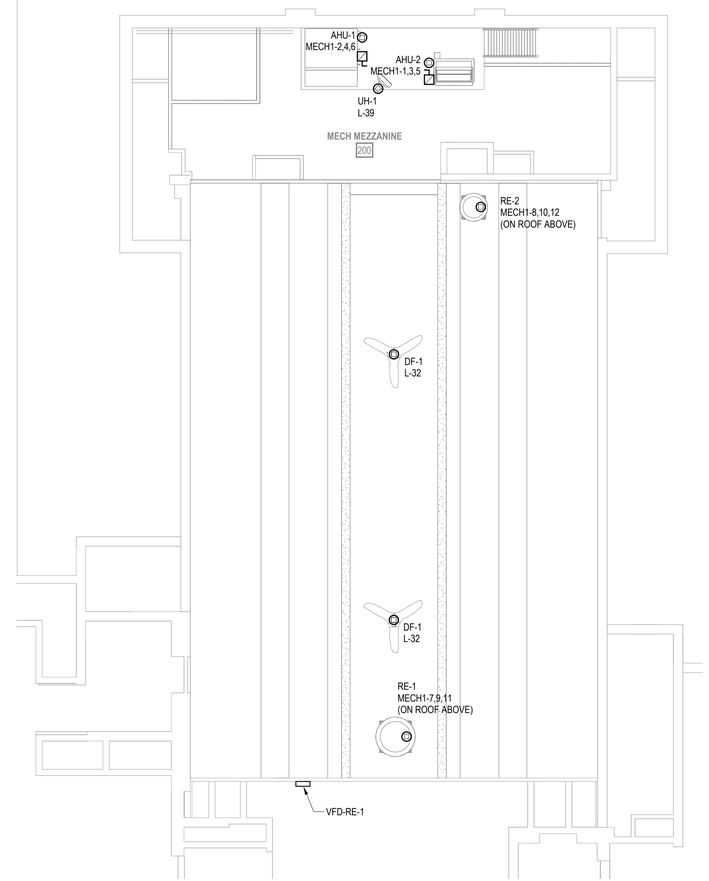


PN
1
E302
TN

## SECOND FLOOR POWER PLAN

SCALE: 1/8" = 1'-0"

STRANG

ARCHITECTURE
ENGINEERING
INTERIOR DESIGN

MADISON, WI | WAUKESHA, WI



REVISIONS

| NO. | DESCRIPTION | DATE |
|---|---|---|

CITY OF MEQUON CITY HALL HVAC AND CHAMBERS UPGRADE

11333 N CEDARBURG ROAD
MEQUON, WI 53092

DATE: 04/05/2024
DRAWING SET CD SET
STRANG PROJECT NO. 20240024

SECOND FLOOR POWER PLAN

E302

4/5/2024 7:46:58 AM

## # SPECIFIC SYSTEMS NOTES

4.1 PROVIDE TWO DATA PORT OUTLET FOR TEMPERATURE CONTROL PANEL.

4.2 LOCATION OF EXISTING BOSE PA HEAD END UNIT. PROVIDE NEW BOSE FREESPACE IZA250-LZ CONTROLLER FOR TWO ADDITIONAL SPEAKERS OVER DAIS.

4.3 PROVIDE WHITE FREESPACE FS4CE IN-CEILING LOUDSPEAKER AND RECESS MOUNT IN NEW CEILING. PROVIDE NEW 16/2 AWG STRANDED PLENUM RATED SPEAKER WIRE BACK TO AV CONTROLLER IN AV STORAGE ROOM 117.

4.4 PROVIDE BLACK FREESPACE FS2P PENDANT LOUDSPEAKER AND MOUNT FROM EXISTING CEILING STRUCTURE BETWEEN CEILING BAFFLES SO THAT THE BOTTOM OF THE SPEAKER IS FLUSH WITH BAFFLE. PROVIDE NEW 16/2 AWG STRANDED PLENUM RATED SPEAKER WIRE BACK TO AV CONTROLLER IN AV STORAGE ROOM 117.

4.5 PROVIDE EDGEMAX EM90 IN-CEILING LOUDSPEAKER WITH WHITE GRILL. PROVIDE NEW 16/2 AWG STRANDED PLENUM RATED SPEAKER WIRE BACK TO AV CONTROLLER IN AV STORAGE ROOM 117.

4.6 PROVIDE ONE NETWORK PoE CONNECTION.

4.7 PROVIDE A SINGLE GANG WALLPLATE FOR HDMI WALLPLATE.

4.8 PROVIDE AT LEAST A 2" CABLE PATH FROM THE AV CLOSET 117 TO THE DAIS.

4.9 LOCATION OF EXISTING DATA RACK.

## GENERAL SYSTEMS NOTES

1 EXPOSED CABLE IN UNFINISHED WORK AREAS IS ACCEPTABLE; SUPPORT CABLE IN ACCORDANCE WITH DIVISION 27 SPECIFICATIONS. EXPOSED CABLE INSTALLED IN FINISHED WORK AREAS IS NOT ACCEPTABLE. CABLE SHALL BE INSTALLED IN A RACEWAY PAINTED TO MATCH CEILING FINISH: ROUTE RACEWAY INTO NEAREST ACCESSABLE CEILING CAVITY, THEREAFTER SUPPORTED IN ACCORDANCE WITH DIVISION 27 SPECIFICATIONS.

2 REFER TO SPECIFICATION SECTION 07 84 00 PENETRATION FIRE STOPPING FOR ALL FLOOR AND WALL PENETRATIONS THROUGH RATED WALLS. REFER TO THE ARCHITECTURAL LIFE SAFETY PLAN SHEETS FOR FLOOR AND WALL RATINGS.

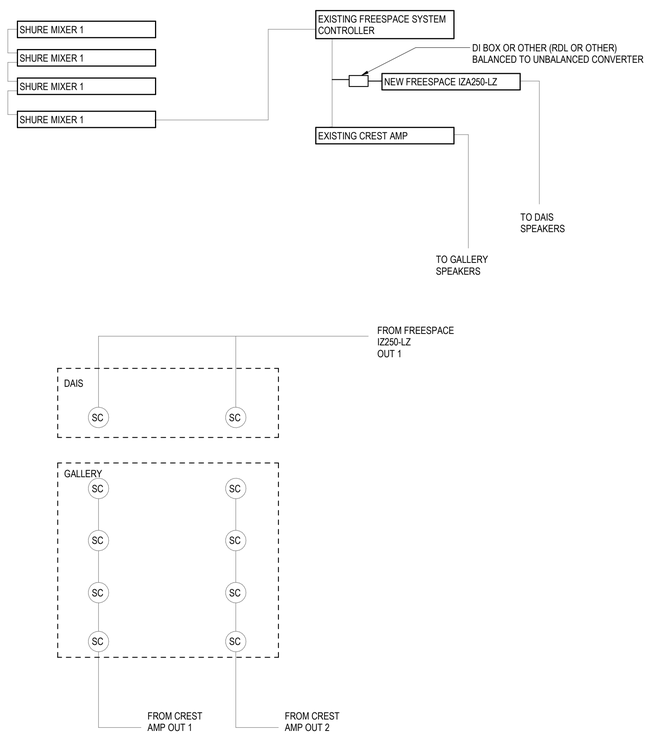


1 E401 **PROPOSED AUDIO SYSTEM SCHEMATIC**

SCALE: NTS

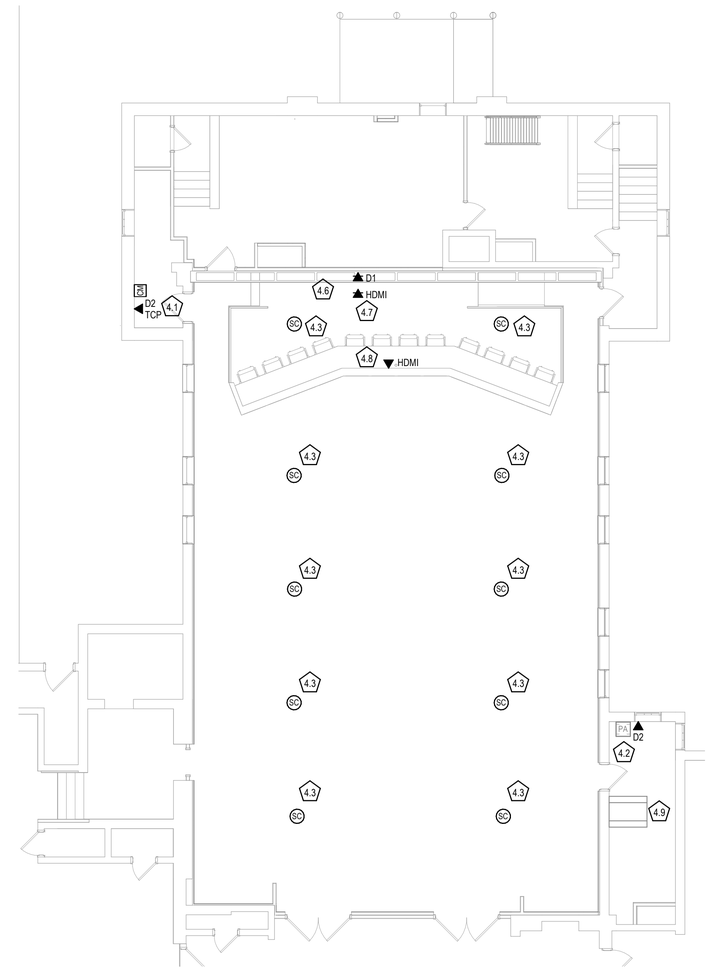


PN TN 2 E401 **FIRST FLOOR SYSTEMS PLAN - BASE BID**

SCALE: 1/8" = 1'-0"

STRANG

ARCHITECTURE
ENGINEERING
INTERIOR DESIGN

MADISON, WI | WAUKESHA, WI



REVISIONS

| NO. | DESCRIPTION | DATE |
|---|---|---|

CITY OF MEQUON CITY HALL HVAC AND CHAMBERS UPGRADE

11333 N CEDARBURG ROAD
MEQUON, WI 53092

DATE: 04/05/2024
DRAWING SET CD SET
STRANG PROJECT NO. 2024024

FIRST FLOOR SYSTEMS PLAN - BASE BID

E401

4/4/2024 6:29:20 PM

## GENERAL SYSTEMS NOTES

1 EXPOSED CABLE IN UNFINISHED WORK AREAS IS ACCEPTABLE; SUPPORT CABLE IN ACCORDANCE WITH DIVISION 27 SPECIFICATIONS. EXPOSED CABLE INSTALLED IN FINISHED WORK AREAS IS NOT ACCEPTABLE. CABLE SHALL BE INSTALLED IN A RACEWAY PAINTED TO MATCH CEILING FINISH: ROUTE RACEWAY INTO NEAREST ACCESSABLE CEILING CAVITY, THEREAFTER SUPPORTED IN ACCORDANCE WITH DIVISION 27 SPECIFICATIONS.

2 REFER TO SPECIFICATION SECTION 07 84 00 PENETRATION FIRE STOPPING FOR ALL FLOOR AND WALL PENETRATIONS THROUGH RATED WALLS. REFER TO THE ARCHITECTURAL LIFE SAFETY PLAN SHEETS FOR FLOOR AND WALL RATINGS.

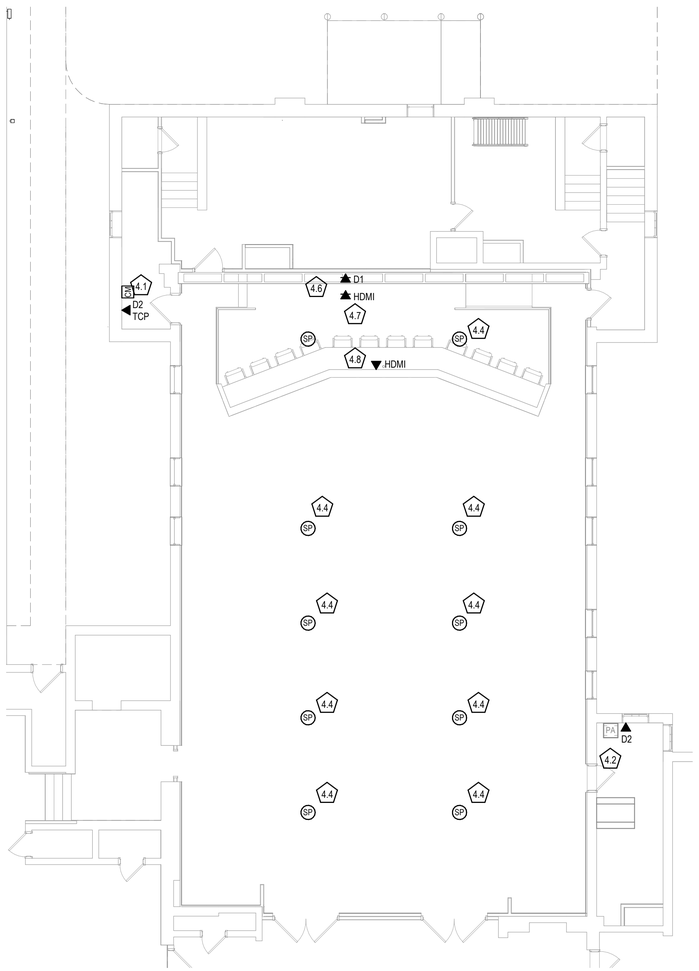


PN 1 E401A TN

## FIRST FLOOR SYSTEMS PLAN - ALTERNATE 1

SCALE: 1/8" = 1'-0"

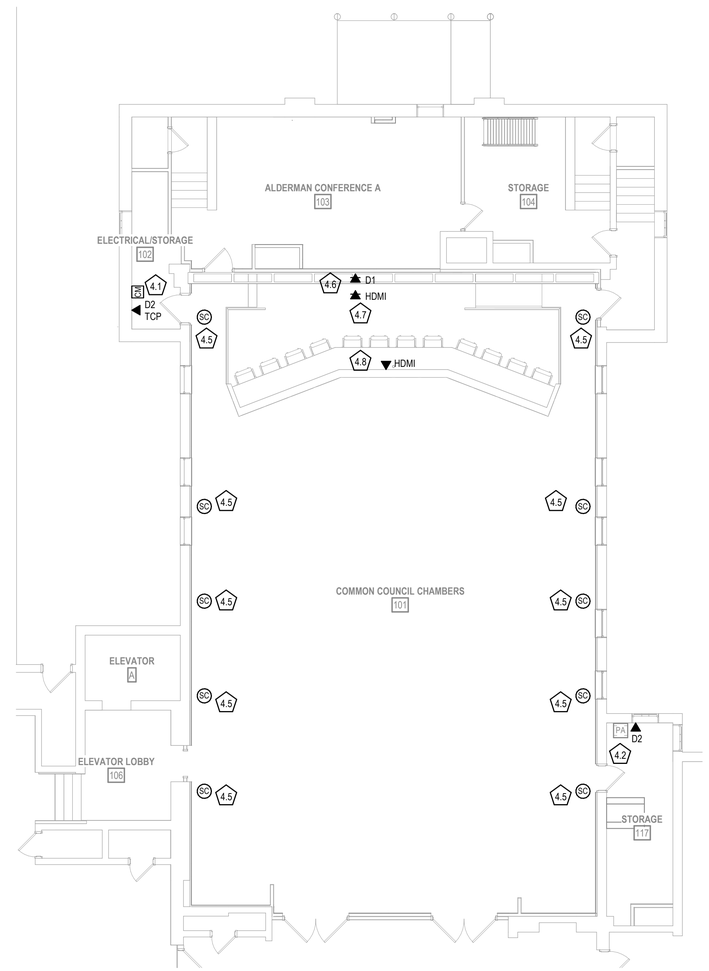


PN 2 E401A TN

## FIRST FLOOR SYSTEMS PLAN - ALTERNATE 2

SCALE: 1/8" = 1'-0"

## # SPECIFIC SYSTEMS NOTES

4.1 PROVIDE TWO DATA PORT OUTLET FOR TEMPERATURE CONTROL PANEL.

4.2 LOCATION OF EXISTING BOSE PA HEAD END UNIT. PROVIDE NEW BOSE FREESPACE IZA250-LZ CONTROLLER FOR TWO ADDITIONAL SPEAKERS OVER DAIS.

4.3 PROVIDE WHITE FREESPACE FS4CE IN-CEILING LOUDSPEAKER AND RECESS MOUNT IN NEW CEILING. PROVIDE NEW 16/2 AWG STRANDED PLENUM RATED SPEAKER WIRE BACK TO AV CONTROLLER IN AV STORAGE ROOM 117.

4.4 PROVIDE BLACK FREESPACE FS2P PENDANT LOUDSPEAKER AND MOUNT FROM EXISTING CEILING STRUCTURE BETWEEN CEILING BAFFLES SO THAT THE BOTTOM OF THE SPEAKER IS FLUSH WITH BAFFLE. PROVIDE NEW 16/2 AWG STRANDED PLENUM RATED SPEAKER WIRE BACK TO AV CONTROLLER IN AV STORAGE ROOM 117.

4.5 PROVIDE EDGEMAX EM90 IN-CEILING LOUDSPEAKER WITH WHITE GRILL. PROVIDE NEW 16/2 AWG STRANDED PLENUM RATED SPEAKER WIRE BACK TO AV CONTROLLER IN AV STORAGE ROOM 117.

4.6 PROVIDE ONE NETWORK PoE CONNECTION.

4.7 PROVIDE A SINGLE GANG WALLPLATE FOR HDMI WALLPLATE.

4.8 PROVIDE AT LEAST A 2" CABLE PATH FROM THE AV CLOSET 117 TO THE DAIS.

4.9 LOCATION OF EXISTING DATA RACK.


STRANG
ARCHITECTURE
ENGINEERING
INTERIOR DESIGN
MADISON, WI | WAUKESHA, WI




REVISIONS

| NO. | DESCRIPTION | DATE |
|---|---|---|

CITY OF MEQUON CITY HALL HVAC AND CHAMBERS UPGRADE
11333 N CEDARBURG ROAD
MEQUON, WI 53092

DATE: 04/05/2024
DRAWING SET CD SET
STRANG PROJECT NO. 2024024

FIRST FLOOR SYSTEMS PLAN - ALTERNATE 1 & 2

E401A

4/4/2024 6:29:22 PM

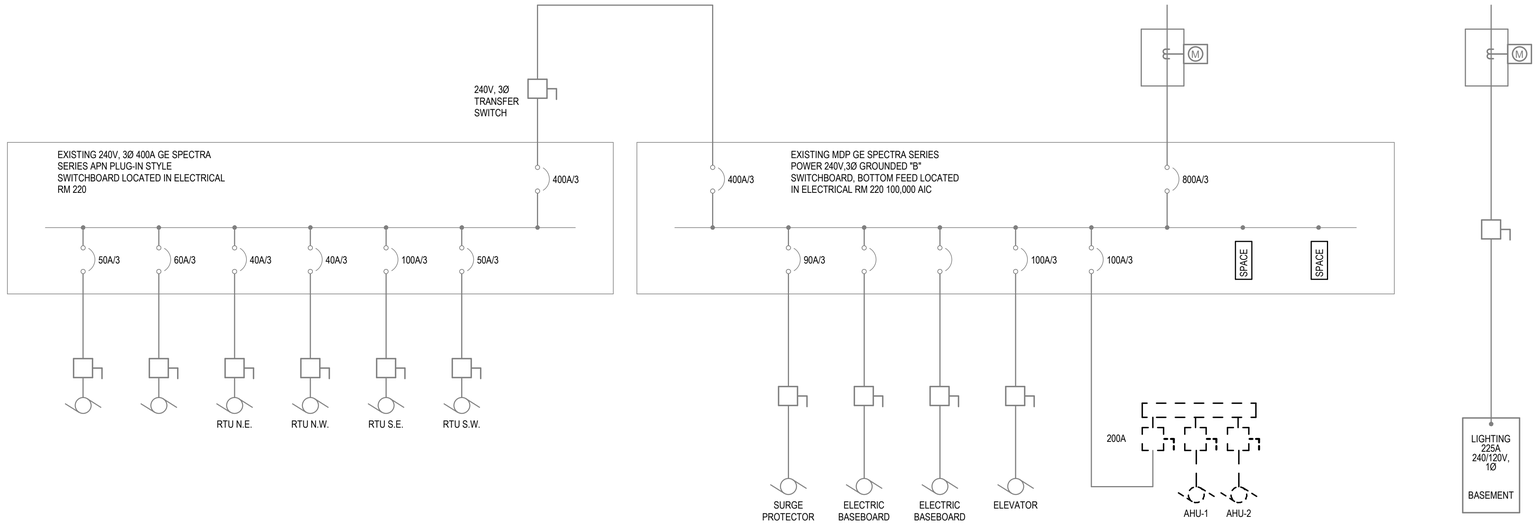


1 E701

## PARTIAL ONE-LINE DIAGRAM - DEMOLITION

SCALE: 1/8" = 1'-0"

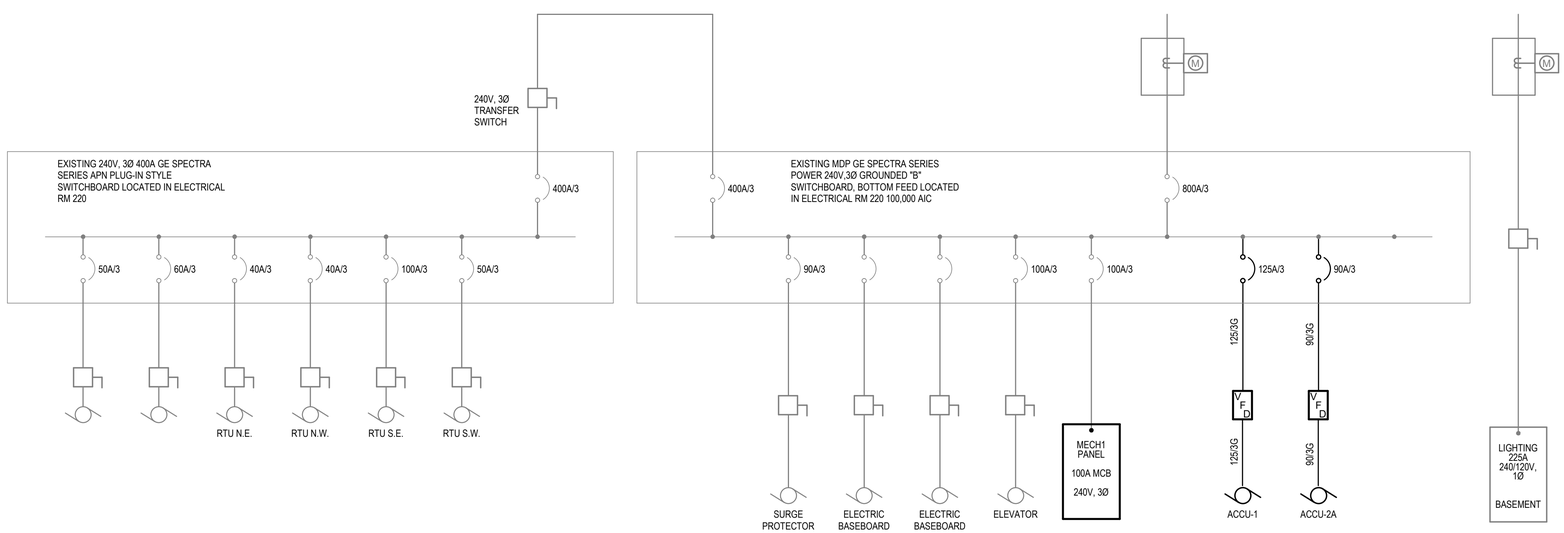


2 E701

## PARTIAL ONE-LINE DIAGRAM - NEW WORK

SCALE: 1/8" = 1'-0"

## FEEDER SCHEDULE

1. NOT ALL FEEDER AMPACITY OR WIRING CONFIGURATION MAY BE UTILIZED.
2. CONDUCTOR AMPACITIES PER NEC TABLE 310-15(B)(16), CU, XHHW-2. FEEDER AMPACITY NOTED WITH (*) ARE BASED ON 60ºC PER NEC 110.14(C).
3. CONDUIT SIZES ARE PER NEC CHAPTER 9 TABLES, 40% FILL OF SCHEDULE 80 PVC.
4. CONDUCTOR AND CONDUIT SIZES SHOWN ARE MINIMUM SIZES. FEEDERS ARE NOT DERATED PER NEC ART.310, AND MAY NOT CORRESPOND TO OCPD AMPACITIES SHOWN ON THE ONE-LINE OR RISER DIAGRAM.
5. CONTRACTOR SHALL DERATE EACH FEEDER'S AMPACITY FOR VOLTAGE DROP AND AMBIENT TEMPERATURE. INCREASE THE CONDUCTOR AND RACEWAY SIZES PER THE NEC AND SPECIFICATIONS. SUBMIT CALCULATIONS AND REVISED SIZES TO THE ARCHITECT/ENGINEER.
6. PARALLEL SETS: EACH CONDUIT SHALL HAVE CONDUCTOR GROUPINGS OF A-B-C PHASE CONDUCTORS, GROUNDING CONDUCTOR(S), AND OR NEUTRAL CONDUCTOR(S).

| FEEDER AMPACITY | PARALLEL SETS | CONDUCTOR SIZE (kcmil) | | | CONDUIT SIZE | |
|---|---|---|---|---|---|---|
| | | Ø | N | GND | | |
| | 3G,4G | 3G,4G | 4G | 3G,4G | 3G | 4G |
| 20 * | 1 | 3#12 | 1#12 | 1#12 | 3/4" | 3/4" |
| 30 * | 1 | 3#10 | 1#10 | 1#10 | 3/4" | 3/4" |
| 40 * | 1 | 3#8 | 1#8 | 1#10 | 3/4" | 1" |
| 50 * | 1 | 3#6 | 1#6 | 1#10 | 1" | 1" |
| 60 * | 1 | 3#4 | 1#4 | 1#10 | 1" | 1 1/4" |
| 70 * | 1 | 3#4 | 1#4 | 1#8 | 1 1/4" | 1 1/4" |
| 80 * | 1 | 3#3 | 1#3 | 1#8 | 1 1/4" | 1 1/4" |
| 90 * | 1 | 3#2 | 1#2 | 1#8 | 1 1/4" | 1 1/2" |
| 100 * | 1 | 3#1 | 1#1 | 1#8 | 1 1/2" | 1 1/2" |
| 110 | 1 | 3#1 | 1#1 | 1#6 | 1 1/2" | 1 1/2" |
| 125 | 1 | 3#1 | 1#1 | 1#6 | 1 1/2" | 1 1/2" |
| 150 | 1 | 3#1/0 | 1#1/0 | 1#6 | 1 1/2" | 2" |
| 175 | 1 | 3#2/0 | 1#2/0 | 1#6 | 2" | 2" |
| 200 | 1 | 3#3/0 | 1#3/0 | 1#6 | 2" | 2 1/2" |
| 225 | 1 | 3#4/0 | 1#4/0 | 1#4 | 2" | 2 1/2" |
| 250 | 1 | 3#250 | 1#250 | 1#4 | 2 1/2" | 2 1/2" |
| 300 | 1 | 3#350 | 1#350 | 1#4 | 2 1/2" | 3" |
| 350 | 1 | 3#500 | 1#/500 | 1#3 | 3" | 3 1/2" |
| 400 | 2 | 3#3/0 | 1#3/0 | 1#3 | 2" | 2 1/2" |
| 450 | 2 | 3#4/0 | 1#4/0 | 1#2 | 2" | 2 1/2" |
| 500 | 2 | 3#250 | 1#250 | 1#2 | 2 1/2" | 3" |
| 600 | 2 | 3#350 | 1#350 | 1#1 | 3" | 3" |
| 700 | 2 | 3#500 | 1#500 | 1#1/0 | 3" | 3 1/2" |
| 800 | 3 | 3#300 | 1#300 | 1#1/0 | 2 1/2" | 3" |
| 1000 | 3 | 3#400 | 1#400 | 1#2/0 | 3" | 3" |
| 1200 | 4 | 3#350 | 1#350 | 1#3/0 | 3" | 3" |
| 1600 | 5 | 3#400 | 1#400 | 1#4/0 | 3" | 3 1/2" |
| 2000 | 6 | 3#400 | 1#400 | 1#250 | 3" | 3 1/2" |
| 2500 | 7 | 3#500 | 1#500 | 1#350 | 3 1/2" | 3 1/2" |
| 3000 | 8 | 3#500 | 1#500 | 1#400 | 3 1/2" | 3 1/2" |

STRANG
ARCHITECTURE
ENGINEERING
INTERIOR DESIGN
MADISON, WI | WAUKESHA, WI



REVISIONS

| NO. | DESCRIPTION | DATE |
|---|---|---|

CITY OF MEQUON CITY HALL HVAC AND CHAMBERS UPGRADE
11333 N CEDARBURG ROAD
MEQUON, WI 53092

DATE: 04/05/2024
DRAWING SET CD SET
STRANG PROJECT NO. 2024024

ELECTRICAL ONE-LINE DIAGRAM

E701

4/5/2024 7:36:40 AM

## Ex. Branch Panel: L

**Location:** STORAGE 001
**Supply From:**
**Mounting:** Surface
**Enclosure:** Type 1

**Volts:** 120/240 Single
**Phases:** 1
**Wires:** 3

**A.I.C. Rating:**
**Mains Type:** MCB
**Mains Rating:** 225 A
**MCB Rating:** 225 A

**Notes:**

| CKT | Circuit Description | Trip | Poles | A | | B | | Poles | Trip | Circuit Description | CKT |
|---|---|---|---|---|---|---|---|---|---|---|---|
| 1 | LIGHTS ROW 1 | 20 A | 1 | 0 VA | 0 VA | | | 1 | 20 A | EXISTING - UNKNOWN | 2 |
| 3 | LIGHTS ROW 2 | 20 A | 1 | | | 0 VA | 0 VA | 1 | 20 A | EXISTING - UNKNOWN | 4 |
| 5 | SPOT LIGHTS | 20 A | 1 | 0 VA | 0 VA | | | 2 | 20 A | EXISTING - UNKNOWN | 6,8 |
| 7 | SPOT LIGHTS | 20 A | 1 | | | 0 VA | 0 VA | -- | -- | -- | |
| 9 | LIGHT ROW 3 | 20 A | 1 | 0 VA | 0 VA | | | 1 | 20 A | EXISTING - UNKNOWN | 10 |
| 11 | LIGHT ROW 4 | 20 A | 1 | | | 0 VA | 0 VA | 1 | 20 A | EXISTING - UNKNOWN | 12 |
| 13 | VALANCE & FANS | 20 A | 1 | 0 VA | 0 VA | | | 1 | 20 A | EXISTING - UNKNOWN | 14 |
| 15 | WALL SCONCE LIGHTS AND CAN LIGHTS | 20 A | 1 | | | 0 VA | 0 VA | 1 | 20 A | EXISTING - UNKNOWN | 16 |
| 17 | ASSEMBLY HALL RECEPT | 20 A | 1 | 0 VA | 0 VA | | | 2 | 20 A | CIRCULATING PUMP | 18,20 |
| 19 | ASSEMBLY HALL RECEPT | 20 A | 1 | | | 0 VA | 0 VA | -- | -- | -- | |
| 21 | ASSEMBLY HALL WEST WALL RECEPT | 20 A | 1 | 0 VA | 0 VA | | | 2 | 20 A | AIR COMPRESSOR | 22,24 |
| 23 | DIAS WEST CONF. RM RECEPT | 20 A | 1 | | | 0 VA | 0 VA | -- | -- | -- | |
| 25 | AUDIO/VIDEO ROOM RECEPT | 20 A | 1 | 0 VA | 0 VA | | | 2 | 20 A | LOBBY HEATER | 26,28 |
| 27 | FLOOR RECEPT | 20 A | 1 | | | 0 VA | 0 VA | -- | -- | -- | |
| 29 | FURNACE | 20 A | 1 | 0 VA | 180 VA | | | **1** | **20 A** | **TCP** | **30** |
| 31 | PHONE SYSTEM | 20 A | 1 | | | 0 VA | 1000 VA | **1** | **20 A** | **CEILING FANS COMMON COUNCIL...** | **32** |
| **33** | **ACCU WP/GFI RECEPTACLE** | **20 A** | **1** | 360 VA | 360 VA | | | **1** | **20 A** | **CHAMBER MULTI-MONITOR RECEPTACLE** | **34** |
| **35** | **AV RACK RECEPT STORAGE 117** | **20 A** | **1** | | | 360 VA | 360 VA | **1** | **20 A** | **CHAMBER MULTI-MONITOR RECEPTACLE** | **36** |
| **37** | **Dias Receptacle COMMON COUNCIL...** | **20 A** | **1** | 1080 VA | 360 VA | | | **1** | **20 A** | **CHAMBER MULTI-MONITOR RECEPTACLE** | **38** |
| **39** | **Motor MECH MEZZANINE 200** | **20 A** | **1** | | | 750 VA | -- | 1 | -- | SPACE | 40 |
| 41 | SPACE | -- | 1 | -- | -- | | | 1 | -- | SPACE | 42 |
| | | | **Total Load:** | 2340 VA | | 2470 VA | | | | | |
| | | | **Total Amps:** | 20 A | | 21 A | | | | | |

| Load Classification | Connected Load | Demand Factor | Estimated Demand | Panel Totals | |
|---|---|---|---|---|---|
| Motor | 1930 VA | 109.72% | 2118 VA | | |
| Receptacle | 2880 VA | 100.00% | 2880 VA | **Total Conn. Load:** | 4810 VA |
| | | | | **Total Est. Demand:** | 4998 VA |
| | | | | **Total Conn. Current:** | 20 A |
| | | | | **Total Est. Demand Current:** | 21 A |

## Branch Panel: MECH1

**Location:** ELECTRICAL/STORAGE 102
**Supply From:** MDP
**Mounting:** Surface
**Enclosure:** Type 1

**Volts:** 240 3 Phase
**Phases:** 3
**Wires:** 3

**A.I.C. Rating:** SEE SPEC
**Mains Type:** MCB
**Mains Rating:** 100 A

| CKT | Options | Circuit Description | Rating | Poles | A | | B | | C | | Poles | Rating | Circuit Description | Options | CKT |
|---|---|---|---|---|---|---|---|---|---|---|---|---|---|---|---|
| 1,3,5 | | AHU-2 (MEZZ) | 20 A | 3 | 1437 VA | 2702 VA | | | | | 3 | 25 A | AHU-1 (MEZZ) | | 2,4,6 |
| | -- | -- | -- | -- | | | 1437 VA | 2702 VA | | | -- | -- | -- | -- | |
| | -- | -- | -- | -- | | | | | 1437 VA | 2702 VA | -- | -- | -- | -- | |
| 7,9,11 | | RE-1 (ROOF) | 15 A | 3 | 831 VA | 443 VA | | | | | 3 | 15 A | RE-2 (ROOF) | | 8,10,12 |
| | -- | -- | -- | -- | | | 831 VA | 443 VA | | | -- | -- | -- | -- | |
| | -- | -- | -- | -- | | | | | 831 VA | 443 VA | -- | -- | -- | -- | |
| 13 | | SPACE | -- | 1 | -- | -- | | | | | 1 | -- | SPACE | | 14 |
| 15 | | SPACE | -- | 1 | | | -- | -- | | | 1 | -- | SPACE | | 16 |
| 17 | | SPACE | -- | 1 | | | | | -- | -- | 1 | -- | SPACE | | 18 |
| 19 | | SPACE | -- | 1 | -- | -- | | | | | 1 | -- | SPACE | | 20 |
| 21 | | SPACE | -- | 1 | | | -- | -- | | | 1 | -- | SPACE | | 22 |
| 23 | | SPACE | -- | 1 | | | | | -- | -- | 1 | -- | SPACE | | 24 |
| | | | | **Total Load:** | 5414 VA | | 5414 VA | | 5414 VA | | | | | | |
| | | | | **Total Amps:** | 39 A | | 39 A | | 39 A | | | | | | |

| Load Classification | Connected Load | Demand Factor | Adjusted Demand | Panel Totals | |
|---|---|---|---|---|---|
| Motor | 16241 VA | 112.48% | 18268 VA | | |
| | | | | **Total Conn. Load:** | 16241 VA |
| | | | | **Total Adj. Demand:** | 18268 VA |
| | | | | **Total Conn. Current:** | 39 A |
| | | | | **Total Adj. Demand Current:** | 44 A |

**Options:**

GFI - GFCI BREAKER  AFCI - AFCI BREAKER  SD - SWITCHING DUTY  F - FUSED  ST - SHUNT TRIP  MCS - MOLDED CASE SWITCH  HT - HANDLE TIE

**Notes:**

## MECHANICAL EQUIPMENT CONNECTON SCHEDULE NOTES:

1. ALL ELECTRICAL CONNECTIONS TO OTHER CONTRACTORS' EQUIPMENT SHALL BE FULLY COORDINATED WITH THE PROVIDING CONTRACTOR PRIOR TO ROUGH-IN. ELECTRICAL CONTRACTOR SHALL PROVIDE ALL ADJUSTMENTS NEEDED TO PROVIDE POWER TO EQUIPMENT. ANY ADJUSTMENTS REQUIRED SHALL BE AT NO COST TO THE PROJECT.
2. COORDINATE ALL ELECTRICAL REQUIREMENTS WITH APPROVED SHOP DRAWING PRIOR TO ROUGH-IN AND BEFORE SUBMITTING ELECTRICAL EQUIPMENT.

**LEGEND:**

NFSS - NON-FUSED SAFETY SWITCH
FSS - FUSED SAFETY SWITCH
FVNR - FULL VOLTAGE NON REVERSING
INT - INTERGRAL STARTER
VFD - VARIABLE FREQUENCY DRIVE
MFR - MANUFACTURER
CB - CIRCUIT BREAKER
TS - TOGGLE SWITCH

### MECHANICAL EQUIPMENT CONNECTION SCHEDULE

| EQUIPMENT ID | DESCRIPTION | LOCATION | | FLA | LOAD (VA) | BRANCH CIRCUIT SIZE | STARTER | | DISCONNECT | | NOTES |
|---|---|---|---|---|---|---|---|---|---|---|---|
| | | NAME | NUMBER | | | | TYPE | FURN / INST | TYPE | FURN / INST | |
| ACCU-1 | CONDENSING UNIT | SITE | | 66 A | 27436 VA | SEE ONE-LINE DIAGRAM | INT | DIV 23 / DIV 26 | FSS | DIV 26 / DIV 26 | |
| ACCU-2 | CONDENSING UNIT | SITE | | 33 A | 13718 VA | SEE ONE-LINE DIAGRAM | INT | DIV 23 / DIV 26 | FSS | DIV 26 / DIV 26 | |
| AHU-1 | AIR HANDLING UNIT | MECH MEZZANINE | 200 | 20 A | 8106 VA | 2#12, 1#12G IN 3/4" C | VFD | DIV 23 / DIV 26 | VFD | DIV 23 / DIV 26 | 5kA SHORT CIRCUIT CURRENT RATING |
| AHU-2 | AIR HANDLING UNIT | MECH MEZZANINE | 200 | 10 A | 4311 VA | 2#12, 1#12G IN 3/4" C | VFD | DIV 23 / DIV 26 | VFD | DIV 23 / DIV 26 | 5kA SHORT CIRCUIT CURRENT RATING |
| DF-1 | DESTRATIFICATION FAN | | | 0 A | 500 VA | 2#12, 1#12G IN 3/4" C | -- | -- | CB | DIV 26 / DIV 26 | CONTROLLED BY BAS |
| DF-1 | DESTRATIFICATION FAN | | | 0 A | 500 VA | 2#12, 1#12G IN 3/4" C | -- | -- | CB | DIV 26 / DIV 26 | CONTROLLED BY BAS |
| RE-1 | EXHAUST FAN | ROOF | | 6 A | 2494 VA | 2#12, 1#12G IN 3/4" C | VFD | DIV 23 / DIV 26 | VFD | DIV 23 / DIV 26 | |
| RE-2 | EXHAUST FAN | ROOF | | 3 A | 1330 VA | 2#12, 1#12G IN 3/4" C | VFD | DIV 23 / DIV 26 | VFD | DIV 23 / DIV 26 | |

## Ex. Switchboard: MDP

**Location:**
**Supply From:**
**Mounting:** Surface
**Enclosure:** Type 1

**Volts:** 240 3 Phase
**Phases:** 3
**Wires:** 3
**Neutral Bus:**

**A.I.C. Rating:** 100,000
**Mains Type:** MCB
**Mains Rating:** 800A

EXISTING GE SPECTRA SERIES POWER PANELBOARD, BOTTOM FEED

| CKT | Circuit Description | # of Poles | Trip Rating | Load | Remarks |
|---|---|---|---|---|---|
| 1 | SPACE | 1 | -- | -- | |
| 2 | SPACE | 1 | -- | -- | |
| 3 | PANEL MECH1 | 3 | 100 A | 16241 VA | |
| **4** | **ACCU-1 (SITE)** | **3** | **125 A** | **27436 VA** | |
| **5** | **ACCU-2 (SITE)** | **3** | **90 A** | **13718 VA** | |
| 6 | | | | | |
| 7 | AC UNITS | 3 | 20 A | 0 VA | |
| 8 | TOILET ROOM HEATERS | 3 | 20 A | 0 VA | |
| 9 | VEST-TOILET RM HEATERS | 3 | 20 A | 0 VA | |
| 10 | VEST-TOILET RM HEATERS | 3 | 20 A | 0 VA | |
| 11 | LOBBY & MECH RM HEATERS | 3 | 20 A | 0 VA | |
| 12 | ELECTRIC BASEBOARD | 3 | 20 A | 0 VA | |
| 13 | ELECTRIC BASEBOARD | 3 | 20 A | 0 VA | |
| 14 | ELECTRIC BASEBOARD | 3 | 20 A | 0 VA | |
| 15 | ELECTRIC BASEBOARD | 3 | 20 A | 0 VA | |
| 16 | ELECTRIC BASEBOARD | 3 | 20 A | 0 VA | |
| 17 | ELEVATOR | 3 | 20 A | 0 VA | |
| 18 | SURGE SUPPRESSOR | 3 | 20 A | 0 VA | |
| | | | | 57395 VA | |
| | | | | 138 A | |

**Legend:**
GFI - GFCI BREAKER  AFCI - AFCI BREAKER  SD - SWITCHING DUTY  F - FUSED  ST - SHUNT TRIP  MCS - MOLDED CASE SWITCH  ET - ELECTRONIC TRIP  METER - ELECTRONIC METERING

| Load Classification | Connected Load | Demand Factor | Adjusted Demand | Switchboard Totals | |
|---|---|---|---|---|---|
| Motor | 57395 VA | 111.95% | 64254 VA | | |
| | | | | **Total Conn. Load:** | 57395 VA |
| | | | | **Total Adj. Demand:** | 64254 VA |
| | | | | **Total Conn. Current:** | 138 A |
| | | | | **Total Adj. Demand Current:** | 155 A |

**Notes:**

STRANG
ARCHITECTURE
ENGINEERING
INTERIOR DESIGN
MADISON, WI | WAUKESHA, WI



REVISIONS
NO. DESCRIPTION DATE

CITY OF MEQUON CITY HALL HVAC AND CHAMBERS UPGRADE
11333 N CEDARBURG ROAD
MEQUON, WI 53092

DATE: 04/05/2024
DRAWING SET CD SET
STRANG PROJECT NO. 2024024

ELECTRICAL SCHEDULES

E901

4/5/2024 7:35:41 AM