City of Mequon

11333 N. Cedarburg Road
Mequon, WI 53092
Phone: 262-236-2913
Fax: 262-238-1580

www.ci.mequon.wi.us

City Forester

TREE BOARD COMMITTEE
Wednesday, August 10, 2016
5:30 PM
Lower Level Conference Room

AGENDA

1) Call to Order, Roll Call

2) Minutes of March 16, 2016 Meeting Action Requested: Approve Minutes

3) Street Tree Plan for Highlander Estates Addition No. 1
Action Requested: Review and Approve

4) New Business: Discussion
   a. Tree policy and ordinance update

5) City Forester Report

6) Adjourn

Dated: July 27, 2016 */s/ Pam Adams/Chair*

Notice is hereby given that a majority of other governmental bodies may be in attendance at this meeting to gather information about a subject over which they have decision making responsibility, although they will not take any formal action relative thereto at this meeting.

Persons with disabilities requiring accommodations for attendance at this meeting should contact the Deputy City Clerk at 262-236-2914 twenty-four (24) hours in advance of the meeting.

Any questions regarding this agenda may be directed to the City Forestry Department at 262-236-2913, Monday through Friday, 7:00 AM- 3:30 PM.

MEQUON TREE BOARD MINUTES
CITY OF MEQUON
WISCONSIN

* * * * *

The meeting was called to order on March 16, 2016, at 6:30 p.m. Present were Chairperson Pam Adams and Members Clair Krause, Carol Bangs, and Suzanne Schiesel. Also present were Mequon City Forester Ken Baker, Kristin Gies Mequon Nature Preserve, and Kevin Anderson from the Neumann Company.

The following matters were considered by the Committee and action taken as indicated. It is respectfully requested that this report be accepted and the recommendations made herein be approved.

1. Approval of the February 10, 2016 Tree Board Meeting

   Action:

   Carol Bangs motioned to approve the minutes, Member Krause seconded, and the motion passed by a 4-0 vote.

2. Arbor Day Discussion April 24, 2016

   Action & Discussion:

   Ken Baker informed the committee that the Logeman Building was booked for the event, and this would be the last year the event could be held here. The exhibitors were sent invitations, as well as the City Newsletter and Press Release. Chairperson Adams questioned whether the schools were informed yet. Baker stated No, and that he would take care of it.

   Kristin Gies from the Mequon Nature Center suggested that the Tree Board and the Mequon Nature Centers consider an Arbor Day Festival at the Mequon Nature Preserve in the future. The event would incorporate numerous entities, and would be larger than the current event. The point was brought up by Claire Krause that the events main focus was to distribute trees to residents. Chairperson Adams would like to have the event in the central part of the city. Gies brought up the idea of having it at the Mequon Rec Center. Ideas were brought up as to how and where the event could be held. It was a good discussion. It is a work in progress.

3. Street Tree Plan For Highlander Estates

   Action:

   The Members of the Tree Board listened to Mr. Anderson regarding his plan regarding street trees and the planting schedule. Member Schiesel motioned to approve the street tree part of the plan, Member Bangs 2nd passed by a 4-0 vote. There were numerous concerns on the planting schedule, and the Board did not feel comfortable voting on it without discussion with the Community Development. They would like staff recommendation.

4. Tree Presentation Policy and Ordinance

   Action and Discussion: Carol Bangs drafted a list of trees that could be used by developers in new subdivision, the members will consider those and add or delete trees. Member Schiesel said that she read the entire Tree Presentation manual, and that there was info in there that could be deleted. The Board agreed and they would go over the policy.

5. **Adjorn**:

Chairperson Adams motioned to adjorn the meeting at 8:15pm; the motion was passed by a 4-0 vote.

Respectfully submitted,

MEQUON TREE BOARD

_____

_____

_____

_____

City of Mequon

11333 N. Cedarburg Road
Mequon, WI 53092
Phone: 262-236-2934
Fax: 262-242-9655

www.ci.mequon.wi.us

City Forester

TO: **Tree Board Committee**
FROM: **Mike Gies, City Forester**
DATE: **August 1, 2016**
SUBJECT: **Highlander Estates Addition 1**

Background

The street tree plan for Addition No. 1 of Highlander estates just off of Wauwatosa Rd. is up for review. Neumann companies are requesting approval for the next phase of the subdivision. As part of the new phase they are proposing (110) street trees along approximately 2,200lf of new roadway. Additionally they will also plant 37 evergreens and 23 ornamental trees in the open spaces of the subdivision.

Analysis

The plan submitted fulfills all of the requirements of the City of Mequon, tree policy for street tree planting. Below is a list of potential adjustments to the plan.
Changing out the higher quantity of Maples for a more diverse species. (Suggestions include: Hackberry, or Kentucky coffee tree)
Changing out the use of all one species type of evergreen in the open areas. (Suggestions include: Pine, or Juniper)
Also to be included is watering service at time of planting
Smaller groupings of same-species of trees along roadways

Fiscal Impact

There is no cost to the city associated with the changes recommended.

Recommendation

Staff recommends approval for Addition No.1 of Highlander estates with changes made in accordance with the above adjustments.

NEUMANN
COMPANIES INC

July 28, 2016

City of Mequon
11333 North Cedarburg
Mequon, WI 53092

Attn: Mike Gies
City Forester

Re: Street Tree Submittal
Highlander Estates, Addition No.1

Dear Mike:

Neumann Companies, Inc. is pleased to submit the attached landscape plans for the Addition No.1 to the Highlander Estates subdivision. The attached plans include the complete landscape package which includes Street Trees. As requested, six copies of the plans are attached as well as (2) full-sized sets.

Please note that the Street Trees will be planted in the ROW; on the side without sidewalks they will be at least 10' from the curb and on the side of the street with sidewalks, between the sidewalk and the curb. Additionally, the tree spacing is not consistent as we have attempted to locate the trees to coordinate with the anticipated driveway locations.

Our plans show a total of one-hundred ten (110) Street Trees along approximately 2,200lf of roadway with tree species as outlined below:

- Autumn Blaze Maple
- Green Mountain Sugar Maple
- Autumn Gold Ginko
- Skyline Honey Locust
- London Plane Tree
- Swamp White Oak
- Greenspire Linden
- Patriot Elm

Additionally, we have approximately 37 evergreen trees and 23 ornamental trees in the open spaces around the subdivision. Feel free to contact me with any questions or if additional materials or information is needed for the meeting.

Sincerely,

Kevin Anderson

NEUMANN COMPANIES, INC. • N27 W24075 PAUL CT. SUITE 200 • PEWAUKEE, WI 53072
262-542-9200 • FAX: 262-349-9324 • NEUMANNCOMPANIES.COM

PLANT SCHEDULE:

PLANT SCHEDULE

TREES	BOTANICAL NAME / COMMON NAME	CONT	QTY
	Acer freemanii 'Autumn Blaze' / Autumn Blaze Maple	2.5"	17
	Acer saccharum 'Green Mountain' / Green Mtn. Sugar Maple	3"	12
	Ginkgo biloba 'Autumn Gold' TM / Autumn Gold Ginko	3"	14
	Gleditsia triacanthos inermis 'Skyline' / Skyline Honey Locust	3"	9
	Platanus x acerifolia / London Plane Tree	3"	12
	Quercus bicolor / Swamp White Oak	2.5"	9
	Quercus macrocarpa / Burr Oak	3"	15
	Tilia cordata 'Greenspire' / Greenspire Linden	3"	8
	Ulmus carpinifolia 'Patriot' / Patriot Elm	2.5"	14
EVERGREEN TREES	**BOTANICAL NAME / COMMON NAME**	**CONT**	**QTY**
	Picea glauca / White Spruce	7-8' ht.	16
	Picea glauca 'Densata' / Black Hills Spruce	7-8' ht.	21
ORNAMENTAL	**BOTANICAL NAME / COMMON NAME**	**CONT**	**QTY**
	Malus sargentii 'Firebird' / Firebird Crabapple	8' ht.	15
	Malus 'Spring Snow' / Spring Snow Crabapple	7' ht.	8

NOTES:

TREES HAVE BEEN PLACED TO AVOID ANTICIPATED DRIVEWAY ACCESS TO EACH LOT.

REFER TO SHEET L-2 FOR OPEN SPACE PLAN AND PLAYGROUND - PAVILION ENLARGEMENTS; SHEETS L-3 & L-4 FOR DETAILS AND NOTES

1 LANDSCAPE PLAN -- PHASE II:

SCALE: 1"= 60'-0"

0 30' 60' 90'

TRIO

DEVELOPED BY:
NEUMANN COMPANIES INC
NEUMANN COMPANIES, INC
N27W23085 PAUL COURT
PEWAUKEE, WI 53072

teska associates
627 Grove Street
Evanston, Illinois
60201-4474

THE HIGHLANDER ESTATES

MEQUON, WISCONSIN

PLANNED SINGLE FAMILY RESIDENTIAL CLUSTER DEVELOPMENT

REV.	COMMENTS	DATE
1	FOR BID	06/20/16
2	REISSUED	07/27/16

SCALE:	1:50
DESIGNED BY:	NP
DRAWN BY:	DF
CHECKED BY:	NP
DATE:	07/27/16

SHEET:

L-1

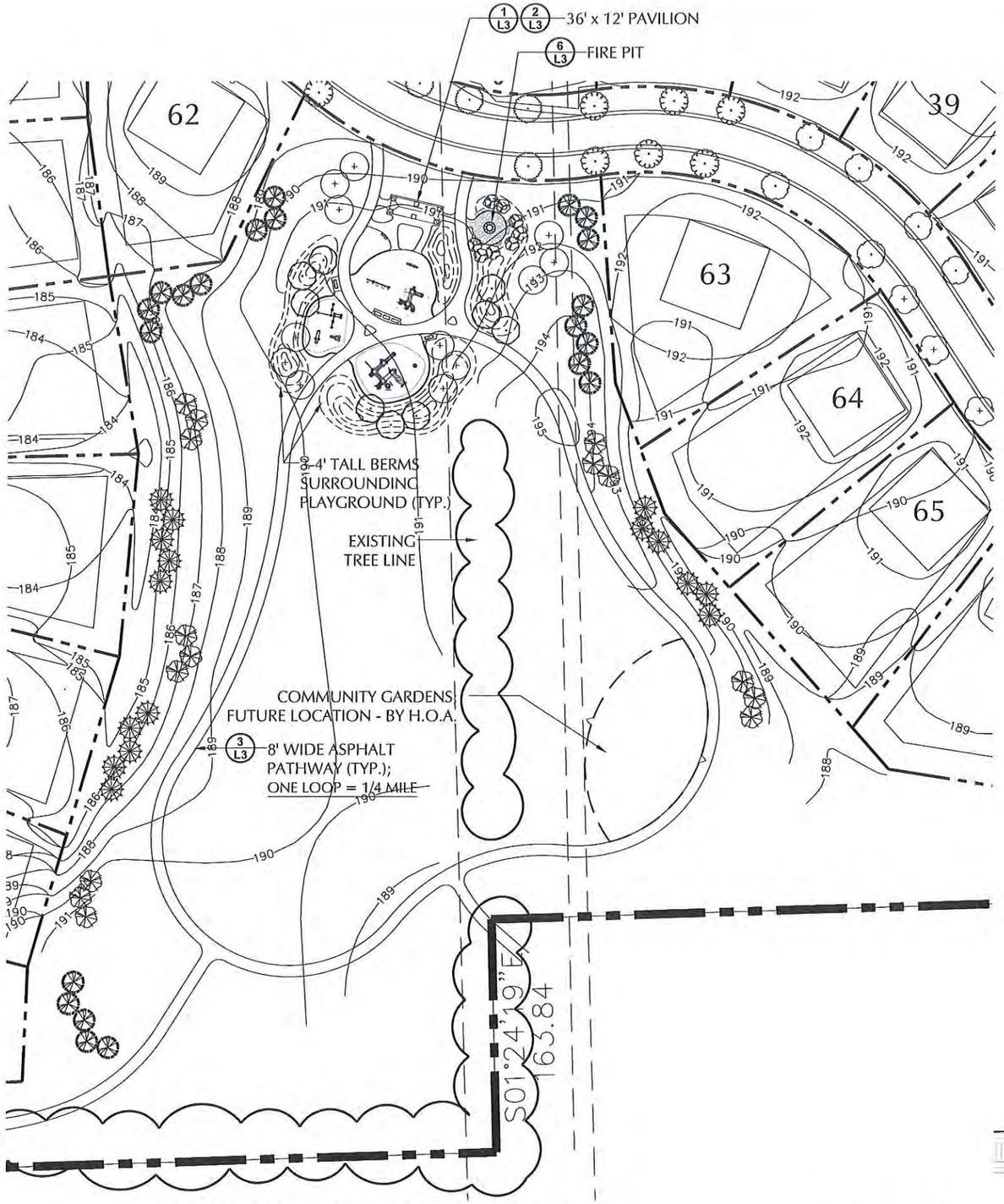

1 OPEN SPACE ENLARGEMENT PLAN:

SCALE: 1"= 40'-0"

0 20' 40' 60'

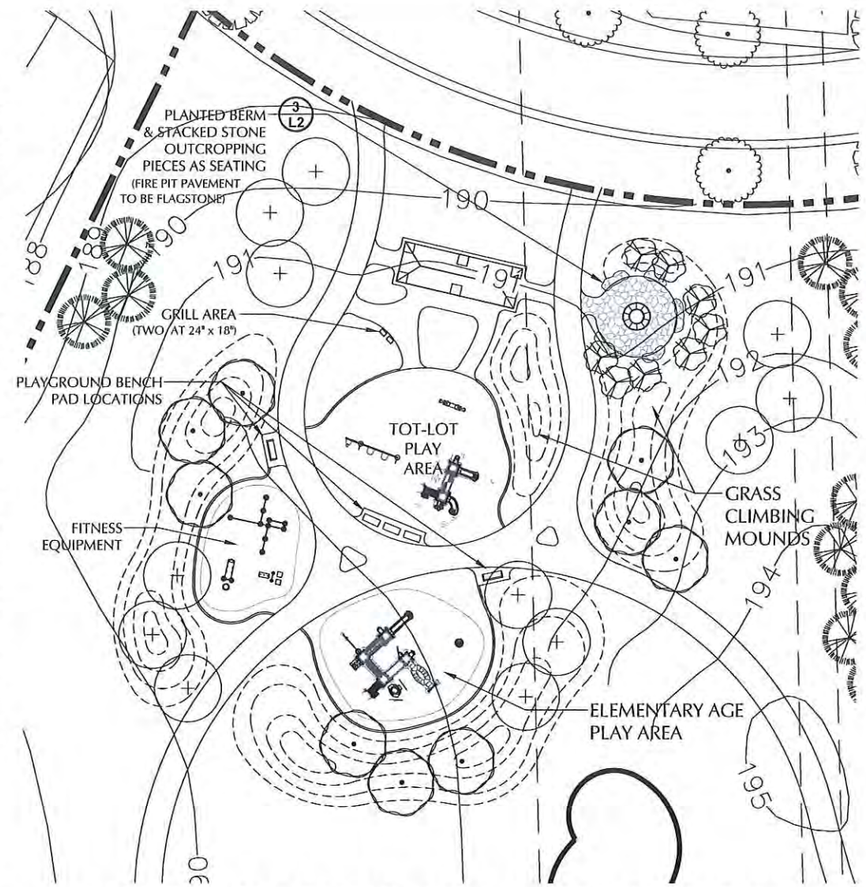

2 PLAYGROUND & PAVILION ENLARGEMENT PLAN:

SCALE: 1"= 30'-0"

0 10' 20' 40'

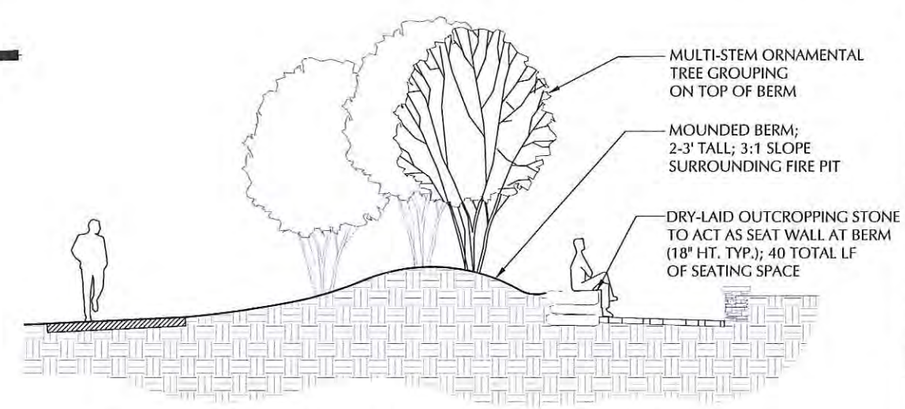

3 STONE OUTCROPPING AS SEAT WALL:

NOT TO SCALE

TRIO

DEVELOPED BY:
NEUMANN COMPANIES INC
NEUMANN COMPANIES, INC
N27W24075 PAUL COURT
PEWAUKEE, WI 53072

teska associates
627 Grove Street
Evanston, Illinois
60201-4474

THE HIGHLANDER ESTATES

MEQUON, WISCONSIN

PLANNED SINGLE FAMILY RESIDENTIAL CLUSTER DEVELOPMENT

REV.	COMMENTS	DATE
1	FOR BID	06/20/16
2	REISSUED	07/27/16

SCALE:	1:50
DESIGNED BY:	NP
DRAWN BY:	DF
CHECKED BY:	NP
DATE:	07/27/16

SHEET:

L-2

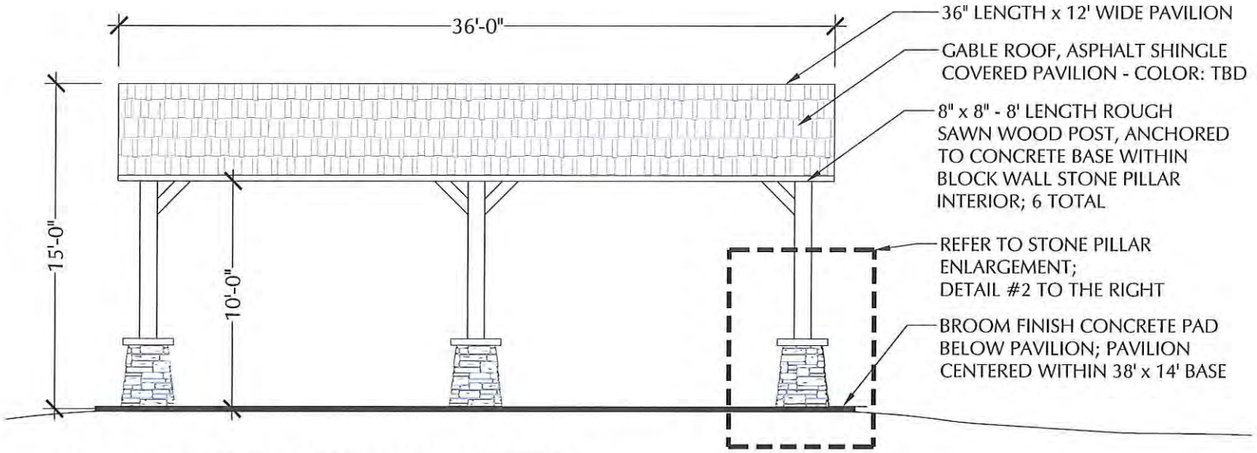

1 OPEN SPACE PAVILION ELEVATION:

NOT TO SCALE

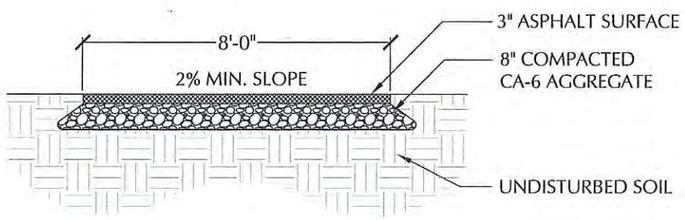

3 ASPHALT PATH DETAIL:

NOT TO SCALE

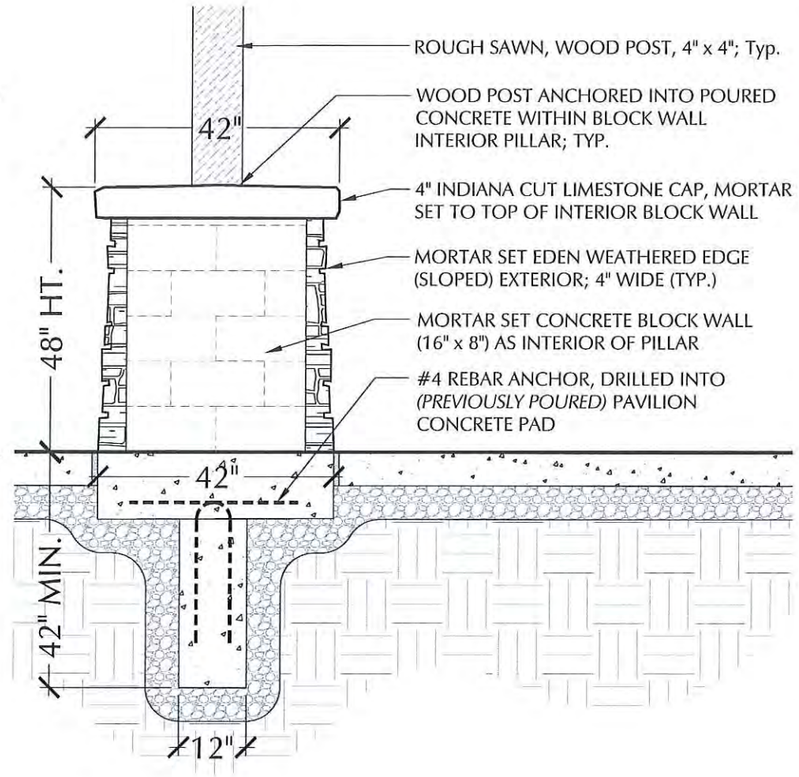

2 STONE PILLAR DETAIL:

NOT TO SCALE

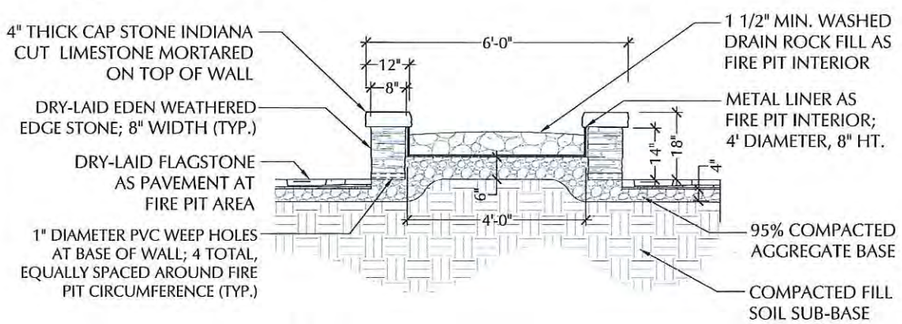

4 FIRE PIT DETAIL:

NOT TO SCALE

NOTE:

ALL STONE FOR PILLARS, OUTCROPPING AND SEAT WALLS SHOULD BE OF THE SAME STYLE TO ACHIEVE A CONTINUOUS THEME WITHIN THE OPEN SPACE AREA; *EDGE WEATHERED EDGE* HAS BEEN THE SPECIFIED MATERIAL IN THE DETAILS BELOW REGARDING STONE WORK.

TRIO

DEVELOPED BY:
NEUMANN COMPANIES, INC.

teska associates
627 Grove Street
Evanston, Illinois
60201-4474

THE HIGHLANDER ESTATES
MEQUON, WISCONSIN
PLANNED SINGLE FAMILY RESIDENTIAL CLUSTER DEVELOPMENT

REV.	COMMENTS	DATE
1	FOR BID	06/20/16
2	REISSUED	07/27/16

SCALE:	1:50
DESIGNED BY:	NP
DRAWN BY:	DF
CHECKED BY:	NP
DATE:	07/27/16

SHEET:

L-3

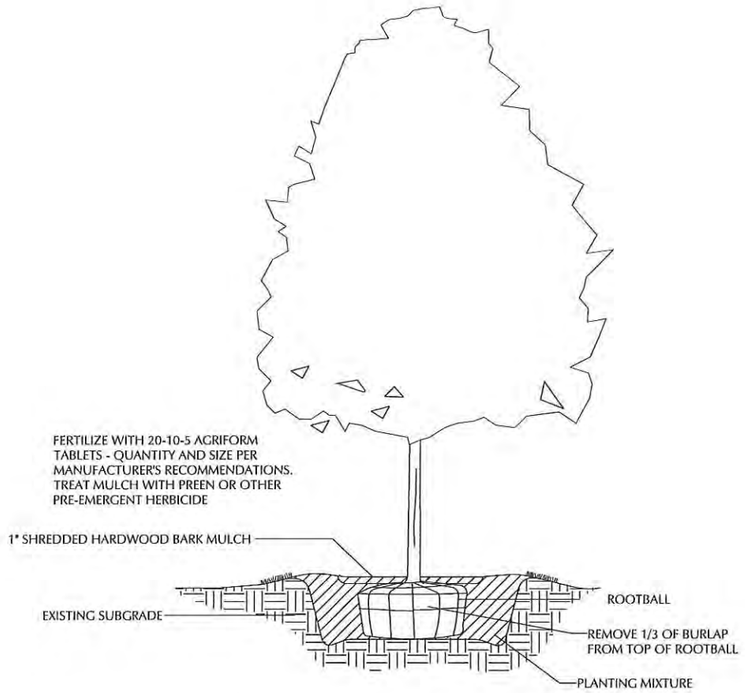

1 DECIDUOUS TREE PLANTING DETAIL:

NOT TO SCALE

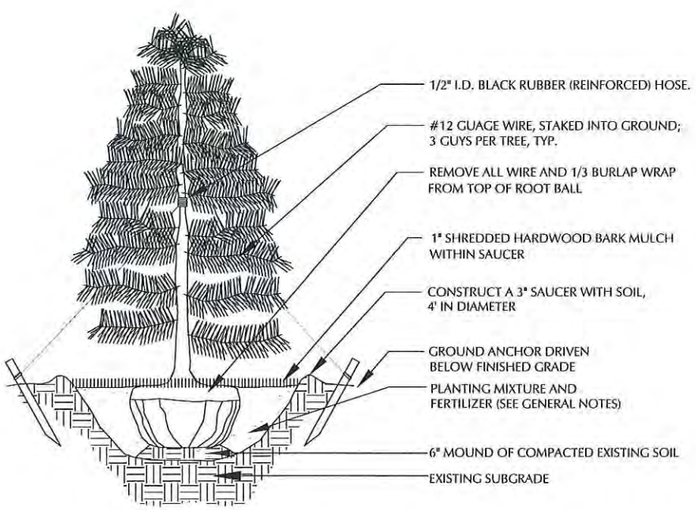

2 EVERGREEN TREE PLANTING DETAIL:

NOT TO SCALE

LANDSCAPE GENERAL NOTES:

1. PRIOR TO COMMENCEMENT OF ANY CONSTRUCTION ACTIVITIES, CONTRACTOR SHALL NOTIFY J.U.L.I.E. TO DETERMINE THE LOCATION OF ANY UNDERGROUND UTILITIES, WHICH MAY AFFECT PROPOSED SITE WORK. CONTRACTOR SHALL NOTIFY THE OWNER/LANDSCAPE ARCHITECT IMMEDIATELY OF ANY DISCREPANCIES, OBSTACLES AND/OR PROBLEMS.

2. VERIFICATION OF DIMENSIONS AND GRADES, BOTH EXISTING AND PROPOSED, SHALL BE THE CONTRACTOR'S RESPONSIBILITY PRIOR TO COMMENCEMENT OF WORK. THE CONTRACTOR SHALL NOTIFY THE OWNER/LANDSCAPE ARCHITECT OF ANY DISCREPANCIES.

3. ALL SURFACE DRAINAGE SHALL BE DIRECTED AWAY FROM STRUCTURES. SURFACE DRAINAGE SHALL BE DIRECTED TO EXISTING CATCH BASINS DESIGNATED FOR THE COLLECTION OF SURFACE RUN-OFF.

4. PLANT MATERIAL SIZES SHOWN ON PLANT SCHEDULE ARE MINIMUM ACCEPTABLE SIZES. ALL PLANT MATERIAL SHALL BE OF SPECIMEN QUALITY. NO 'PARK GRADE' MATERIAL WILL BE ACCEPTED.

5. ALL PLANT MATERIAL SHALL BE OBTAINED FROM AN APPROVED SOUTHEASTERN WISCONSIN NURSERY WITH HEAVY CLAY SOILS.

6. ALL PLANT MATERIAL SHALL CONFORM TO AMERICAN STANDARD FOR NURSERY STOCK AS SPONSORED BY THE AMERICAN ASSOCIATION OF NURSERYMEN AND APPROVED BY THE AMERICAN NATIONAL STANDARDS INSTITUTE, INC. (ANSI)

7. IF SPECIFIED SPECIES AND/ OR QUALITY OF PLANTS ARE NOT AVAILABLE AT THE TIME OF ORDERING, THE LANDSCAPE ARCHITECT, AT HIS/HER DISCRETION, MAY SUBSTITUTE SIMILAR PLANTS WITH THE SAME WHOLESALE VALUE.

8. ALL PLANTS TO BE BALLED IN BURLAP (B&B) OR CONTAINER GROWN (CG) AS SPECIFIED IN PLANT SCHEDULE. ALL NYLON/ PLASTIC ROOT WRAPPING MATERIAL AND METAL WIRE BASKETS SHALL BE REMOVED.

9. SOIL TO BE USED FOR THE PLANTING MEDIUM FOR THE PROJECT SHALL BE FERTILE, WELL-DRAINED, OF UNIFORM QUALITY, FREE OF STONES OVER 1" IN DIAMETER, STICKS, OILS, CHEMICALS, PLASTER, CONCRETE AND OTHER DELETERIOUS MATERIAL.

10. ALL LANDSCAPE MATERIALS SHALL BE INSTALLED IN ACCORDANCE WITH ALL APPLICABLE CITY CODES AND ORDINANCES.

11. ALL LANDSCAPE MATERIALS SHALL BE INSTALLED IN CONFORMANCE WITH THE ACCEPTED INDUSTRY'S STANDARD 'BEST PRACTICE' TECHNIQUES AS IDENTIFIED BY THE WISCONSIN LANDSCAPE CONTRACTORS ASSOCIATION (WLCA).

12. THE OWNER AND/OR LANDSCAPE ARCHITECT RESERVES THE RIGHT TO REJECT ANY PLANT MATERIAL IN POOR CONDITION/ FORM OR NOT INSTALLED ACCORDING TO 'BEST PRACTICE' TECHNIQUES.

13. THE LANDSCAPE CONTRACTOR SHALL PREPARE PLANTING BEDS BY ADDING SOIL AMENDMENTS TO TOPSOIL MIX IN THE FOLLOWING QUANTITIES: TOPSOIL MIX FOR TREES & SHRUBS SHALL BE THREE (3) PARTS TOPSOIL, ONE (1) PART PEAT, AND ONE (1) PART SAND. TOPSOIL MIX FOR PERENNIALS & GROUNDCOVER SHALL BE THREE (3) PARTS TOPSOIL, ONE (1) PART SAND, AND TWO (2) PARTS COMPOST.

14. ALL TREES, SHRUBS AND GROUNDCOVER TO RECEIVE 1" OF SHREDDED HARDWOOD MULCH.

15. CONTRACTOR SHALL WATER PLANTS IMMEDIATELY AFTER PLANTING. FLOOD PLANTS TWICE DURING FIRST TWENTY-FOUR HOURS AFTER PLANTING. ALL PLANTS ARE TO BE REGULARLY WATERED UNTIL THE FALL SEASON; CONTRACTOR SHALL PROVIDE AN ESTIMATED MONTHLY COST OF WATERING DURING THIS DURATION.

16. ALL ROAD AND WALK SURFACES SHALL BE KEPT CLEAR OF MUD AND DEBRIS AT ALL TIMES.

17. CONTRACTOR SHALL REPAIR IN KIND ANY AREAS DAMAGED AS A RESULT OF LANDSCAPE OPERATIONS.

18. GUARANTEE SPECIFICATIONS ARE AS FOLLOWS: THE CONTRACTOR SHALL PROVIDE THE OWNER WITH A BONDED WRITTEN ONE-YEAR WARRANTY AGREEMENT BEGINNING ON THE FIRST DAY OF THE OWNER'S POSSESSION. THIS AGREEMENT SHALL PROVIDE FOR THE REPLACEMENT OF DEAD OR DYING PLANT MATERIAL. THE CONTRACTOR SHALL PROVIDE THE OWNER WITH A TYPEWRITTEN LIST OF SPECIFIC MAINTENANCE INSTRUCTIONS FOR EACH TYPE OF PLANT INSTALLED WITH THE WRITTEN AGREEMENT AND BOND.

19. CITY FORESTER SHALL BE REQUIRED TO RECEIVE NOTIFICATION PRIOR TO THE INSTALLATION OF ANY OR ALL STREET TREES AND IS TO BE PRESENT ON-SITE DURING INSTALLATION TO CONDUCT PROPER INSPECTION.

TRIO

DEVELOPED BY
NEUMANN COMPANIES, INC
NEUMANN COMPANIES, INC
N27W23075 PAUL COURT
PEWAUKEE, WI 53072

teska associates
627 Grove Street
Evanston, Illinois
60201-4474

THE HIGHLANDER ESTATES
MEQUON, WISCONSIN
PLANNED SINGLE FAMILY RESIDENTIAL CLUSTER DEVELOPMENT

REV.	COMMENTS	DATE
1	FOR BID	06/20/16
2	REISSUED	07/27/16

SCALE:	1:50
DESIGNED BY:	NP
DRAWN BY:	DF
CHECKED BY:	NP
DATE:	07/27/16

SHEET:

L-4

City of Mequon

11333 N. Cedarburg Road
Mequon, WI 53092
Phone: 262-236-2913
Fax: 262-238-1850

www.ci.mequon.wi.us

City Forester

TO: Tree Board Committee
From: Mike Gies, City Forester
DATE: August 1, 2016
SUBJECT: Mequon Tree Policy and Ordinance Review

Background

The existing Mequon Tree policy and Ordinance has not been updated since it was adopted in 2007. It is time to dust off this document and revisit the verbiage used in the existing document to see if anything is worth changing. The Tree Preservation Manual was brought up recently regarding a Planning Commission request to remove three specimen trees at 5718 W. Parkview. The interpretation of the ordinance was brought in to question and needs to be potentially addressed or clarified. Also a revision of the street tree list is to be visited as part of the changes in the policy.

Analysis

Moving forward it is important to keep up to date with current methods and techniques being used in the field. Also equally important is the discussion of the interpretation in certain instances, and if exceptions should be an option.

Fiscal Impact

There is no fiscal impact, only staff time to address and update policy/ordinance.

Recommendation

The policy/ordinance update is long overdue. The City of Mequon would benefit from an update of these documents; by being able to streamline requirements of both the residents and contracted services. It would also help to clarify what the **Tree Preservation** policy is supposed to protect.

Revised Residential Street Tree
Planting

DRY- open	MOIST	FLOOD PLAIN	WETLAND
GROUP 1	TALL (40-100')		
	Acer x Fremanii Freeman Maple species	Acer Rubrum *Red Maple ^*	Acer rubrum *Red Maple ^*
	Acer saccharum *Sugar Maple*	Acer saccharinum *Silver Maple #*	Acer saccharinum *Silver maple #*
Carya ovata* *Hickory*	Carya cordiformus *Bitternut Hickory*		
Celtis occidentalis *Hackberry*	Celtis occidentalis *Hackberry*	Celtis occidentalis *Hackberry*	Salix nigra *Black Willow*
Gleditsia triacanthos inermis *Honeylocust species <*	*Gleditsia triacanthos inermis* *Honeylocust species <*	*Gleditsia triacanthos inermis* *Honeylocust species <*	
Gynocladus diocus *Kentucky Coffee Tree <*	*Gynocladus diocus* *Kentucky Coffee Tree <*		
Prunus virginiana *Black Cherry*	Prunus virginiana *Black Cherry*		
Quercus macrocarpa *Burr Oak <*	Quercus rubra *Red Oak <*	Quercus macrocarpa *Bur Oak <*	
Quercus Alba *White Oak <*	Quercus Alba *White Oak <*	Quercus bicolor *Swamp White Oak<*	
Populus tremuloides *Quaking Aspen <~*	Populus tremuloides *Quaking Aspen <~*		
	Ulmus species *American Elm species <*	Ulmus species *American Elm Species <*	
	Tilia americana *American Linden Species <*	Tilia americana *American Linden Species <*	

Revised Residential Street Tree
Planting

DRY- open	MOIST	FLOOD PLAIN	WETLAND
GROUP 2	MEDIUM (30-40')		
Betula 'White spire' *Whitespire Birch*	Betula 'Whitespire' *Whitespire Birch*		
	Betula nigra ^<	Betula nigra ^<	
Carpinus caroliniana *Ironwood*	Carpinus caroliniana *Ironwood*		
Crataegus 'Winter King' *Winter King Hawthorn <*	Crataegus 'Winter King' *Winter King Hawthorn <*		
Gleditsia triacanthos inermis *Honeylocust species<*	*Gleditsia triacanthos inermis* *Honeylocust species <*	*Gleditsia triacanthos inermis* *Honeylocust species <*	
Ostrya virginiana *Hop Hornbeam <*	Ostrya virginiana *Hop Hornbeam <*		
GROUP 3	LOW (15-30')		
	Amelanchier x Grandifolia Apple Serviceberry <	Alnus rugosa Speckled Alder	
Amelanchier laevis *Alleghany Serviceberry<*	Amelanchier laevis Alleghany Serviceberry<		
Crataegus crusgalli inermis Thornless Cockspur Hawthorn <	Crataegus crusgalli inermis		
	Malus disease resistant Crabapple species		
Prunus virginiana ~ Choke cherry<	Prunus virginiana Chokecherry<~		
<greater salt tolerance	# Moist, Wet	^ Sandy loam	~ Suckers

City of Mequon

11333 N. Cedarburg Road
Mequon, WI 53092
Phone: 262-236-2913
Fax: 262-238-1850

www.ci.mequon.wi.us

City Forester

City Forester Report

- Veridian/Enclave subdivision tree installations
- ATC grant application
- Update tree board contact information
- Burzak property on Donges Bay Rd. (WE tree installation)
- Potential dates for next meet??

BURZAK PROP.

Ozaukee County GIS

TextBox1

N

DISCLAIMER: Ozaukee County does not guarantee the accuracy of the material contained here in and is not responsible for any misuse or misrepresentation of this information or its derivatives.

SCALE: 1" = 100'

OZAUKEE COUNTY

Ozaukee County
121 W Main St P.O. Box 994
Port Washington WI 53074
262-284-9411

Print Date: 7/19/2016

X REMOVED DURING CONSTRUCTION

⊙ PROPOSED NEW TREE LOCATIONS

1 - FREEMAN RED MAPLE
2/3 - TILIA AMERICANA "LEGEND" (LINDEN) } FALL 2016 PLANTINGS
4 - SKYLINE LOCUST
5/6 - CRUS GALLI THORNLESS HAWTHORN } * SPRING 2017 PLANTINS

COORDINATE WATERING BAGS WITH CITY